Vanguard Managed Solutions

Vanguard Applications Ware
SNA Feature Protocols

SDLC

Notice

©2003 Vanguard Managed Solutions, LLC
575 West Street
Mansfield, Massachusetts 02048
(508) 261-4000
All rights reserved
Printed in U.S.A.

Restricted Rights Notification for U.S. Government Users

The software (including firmware) addressed in this manual is provided to the U.S. Government under agreement which grants the government the minimum “restricted rights” in the software, as defined in the Federal Acquisition Regulation (FAR) or the Defense Federal Acquisition Regulation Supplement (DFARS), whichever is applicable.

If the software is procured for use by the Department of Defense, the following legend applies:

Restricted Rights Legend

Use, duplication, or disclosure by the Government
is subject to restrictions as set forth in
subparagraph (c)(1)(ii) of the
Rights in Technical Data and Computer Software
clause at DFARS 252.227-7013.

If the software is procured for use by any U.S. Government entity other than the Department of Defense, the following notice applies:

Notice

Notwithstanding any other lease or license agreement that may pertain to, or accompany the delivery of, this computer software, the rights of the Government regarding its use, reproduction, and disclosure are as set forth in FAR 52.227-19(C).

Unpublished - rights reserved under the copyright laws of the United States.

Proprietary Material

Information and software in this document are proprietary to Vanguard Managed Solutions, LLC (or its Suppliers) and without the express prior permission of an officer, may not be copied, reproduced, disclosed to others, published, or used, in whole or in part, for any purpose other than that for which it is being made available. Use of software described in this document is subject to the terms and conditions of the Software License Agreement.

This document is for information purposes only and is subject to change without notice.

Part No. T0101-05, Rev H
Publication Code: DS
First Printing: November, 1998

Manual is current for Release 6.3 of Vanguard Applications Ware.

To comment on this manual, please send e-mail to LGEN031@vanguardms.com

Overview

Introduction

This manual describes the SDLC option for Vanguard products.

In This Manual

Topic	See Page
About the SDLC Option	3
Features and Support	5
SDLC Connectivity	7
SDLC-to-LLC2 Conversion	8
Autolearn for LLC2 Conversion	9
Enhanced Group Polling	11
SNA Dial on Demand	12
SDLC and LLC2 Data/Connection Protection	17
Synchronous Device Support	18
Broadcast XIDs	19
RFC1490 Multiplexing De-Multiplexing for SNA	20
Hunt Group Feature	23
BAN Frame Format Support for Conversion	26
Configurable Internal MAC Addresses	29
Call Establishment	30
Call Clearing	31
Configuring a Node for SDLC Operation	32
Configuring the SDLC Port Record	33
SDLC Port Record Parameters	34
Configuring SDLC Station Record	39
SDLC Station Record Parameters	40
SDLC Configuration Example	47
SDLC Statistics	48
Detailed SDLC Port Statistics	49
Detailed SDLC Link Statistics	52
Detailed SDLC Station Statistics	54
Call Summary Statistics	57
PVC Connection Summary Report	58
Group Poll Statistics	59
Line Activation/Deactivation	61
SDLC-to-LLC2 Conversion	66
How SDLC-to-LLC2 LAN Conversion Works	70
Typical SDLC-to-LLC2 Conversion Applications	71
Configuring SDLC-to-LLC2 Conversion	72
Configuring Autolearn for LLC2 Conversion	74
Token Ring LAN Conversion Example	75
Ethernet LAN Conversion Example	76
Frame Relay Conversion Example	77
Token Ring LAN Conversion with DCP Example	78
BAN Frame Format Conversion Examples	79
Call Redirection through 8500 Example	87

In This Manual
(continued)

Topic	See Page

Reverse LLC2 Conversion 89
SDLC-to-LLC2 Conversion Profile Table 93
LLC-SDLC Profile Table Parameters 94
LLC-SDLC Station Table 97
LLC-SDLC Station Table Parameters 98
Booting SDLC-to-LLC2 Conversion Stations 112
SDLC-to-LLC2 Statistics 114
Station Summary Statistics 115
Detailed Station Statistics 117
Data Connection/Protection (DCP) Statistics 126
Managing SDLC-to-LLC2 Conversion Configurations 127
Examining Configurations 128
Listing Configurations 129
Copying SDLC-to-LLC2 Conversion Configurations 131
Printing Configurations 132

About the SDLC Option

Introduction

The Synchronous Data Link Control (SDLC) option supports passing data using the IBM SDLC protocol on Vanguard devices. The SDLC option lets you use Vanguard nodes to connect multiple remote SDLC devices, called Physical Units (PUs), to multiple hosts.

The SDLC option supports many types of SNA traffic, including:

- SDLC
- LLC2 on Ethernet (802.3) or Token Ring (802.5)
- X.25
- Frame Relay using RC1490

6560 Limitation

Ethernet port 4 on the Vanguard 6560 does not support SDLC applications.

How It Works

To make an SDLC connection, configure a Vanguard node in a Host PAD-Terminal PAD relationship. The Host PAD connects to the primary SNA device, such as an AS/400 or a Front End Processor (FEP), and the Terminal PAD connects to the SNA secondary device, such as a Physical Unit 2.1, as shown in Figure 1.

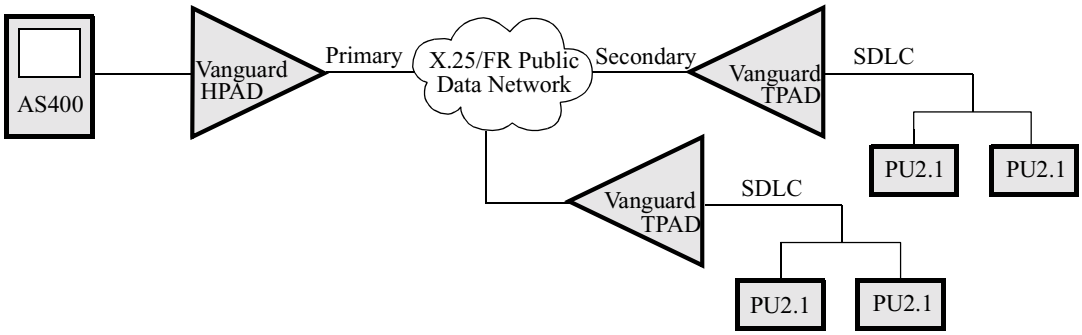

Figure 1. HPAD to TPAD Connectivity

Related IBM Documentation

Before using the SDLC option, you should be familiar with SNA (IBM networking technology), and you should familiarize yourself with IBM's Network Control Program Packet Switching Interface (NPSI) and Qualified Logical Link Control (QLLC).

This is a list of IBM documentation for additional sources of information.

- The X.25 Interface for Attaching SNA Nodes to Packet Switched Data Networks General Information Manual
- X.25 NCP Packet Switching Interface Reference Summary
- X.25 NCP Packet Switching Interface Installation and Operation

Related Documentation

You should also familiarize yourself with the following Vanguard user documentation for details on configuring and operating Vanguard networking devices:

- *Vanguard Configuration Basics Manual* (Part Number T0113)
- *Vanguard Applications Ware Alarms & Reports Manual* (Part Number T0005)

Custom Software Key

Before you can configure your Vanguard for SDLC operation, you must enable the Custom Software Key (CSK) for this option.

- If you do not have a CSK number for this option, contact Customer Support to obtain one. You need to provide the serial number of the node to obtain a CSK.
- If you have a CSK, refer to the *Vanguard Configuration Basics Manual* (Part Number T0113) for details on enabling a CSK.

Features and Support

Introduction

This section describes features, support, and restrictions for the SDLC option.

SDLC Option Features

The SDLC option features:

- Access for Physical Unit (PU) TYPE 1, PU TYPE 2 and PU Type 2.1 devices to an SNA host, using 65xx and Vanguard devices
- Autolearn for SDLC-to-LLC2 Conversion stations for Ethernet and Token Ring
- Broadcast XIDs
- BAN Frame Format Support
- Compatibility with IBM's NPSI software and the QLLC protocol
- Compatibility with IBM SDLC protocol
- SNA Dial on Demand
- Enhanced Group Polling
- Host SDLC line support (single line interface)
- Internal/external clocks
- Local SDLC polling. This eliminates the need to pass poll frames and poll response frames across the network
- Internal MAC Configurable Addresses
- Mark or Flag Idle between frame exchanges
- Multi-host capabilities to an SNA network
- Point-to-point and multipoint connections
- NRZ/NRZI
- RFC1490 Encapsulation of LLC2 for Frame Relay
- RFC1490 Multiplexing and Demultiplexing of SNA traffic
- SDLC frame sizes up to 4k bytes (excluding nodes configured with the 6500 Universal I/O card)
- SDLC-to-LLC2 Conversion for Ethernet and Token Ring
- SDLC-to-LLC2 Conversion support for up to two Ethernet ports per node
- Support for up to 250 SDLC-to-LLC2 Conversion stations per LAN port
- Support for Data Connection Protection (DCP) on SDLC-to-LLC2 conversion
- Traffic Prioritization
- XID3 support on SDLC Port Stations. This lets PU Type 2.1 devices establish a logical link connection through a Vanguard network

Cluster Controller Support

The SDLC option provides:

- Support for up to 64 cluster controllers per port
- SDLC line speeds from 1200 bps to 384 kbps
- Support for Host PAD (HPAD) or Terminal PAD (TPAD) functionality on different Vanguard nodes, or on different ports on the same node. This increases configuration flexibility.

PU2.1 and XID3 Support

The SDLC option provides support for peer-to-peer PU2.1 nodes running IBM APPC or APPN (S/36, S/38, and AS/400) midrange systems. Support of PU 2.1 passes XIDs transparently and does not attempt to interpret and change characteristics based upon the attributes of the end nodes.

Restrictions

These restrictions apply to stations connected to the SDLC ports:

- Although XID3 allows for negotiation, Vanguard devices do not support negotiation. Therefore, the HPAD must be connected to a primary link station or negotiable link station that becomes the primary.
- The TPAD must be connected to a secondary station.
- When operating as negotiable parameters between PU 2.1 stations, the SDLC port works only if the end stations use the following link attributes:
  - The link station uses two-way alternating transmission (TWA) only.
  - SDLC initialization modes SIM and RIM are not supported.
  - Normal sequencing (modulo 8) only.
  - Maximum BTU length must be less than or equal to 4096 bytes.
- Non-activation XIDs are not supported. If an XID is sent in the middle of a session, the line goes down.

Frame Size Restriction on 6500 UI/O Card

Generally, Vanguard nodes running the SDLC option support SDLC frame sizes configurable up to 4K. However, nodes configured with the 6500 Universal I/O card do not support the SDLC 4K frame size.

Limitation on Conversion Station Increase from 64 to 250

If you configure a node for more than 64 conversion stations, you should consider upgrading the memory configuration in the node. The number of stations you can actually support depends on the dynamic memory available within the node.

SDLC Connectivity

Introduction

This section describes connectivity between Vanguard devices and supported SDLC stations and hosts.

65xx and Vanguard Connectivity

Vanguard devices use a full-duplex, point-to-point circuit as a physical transmission path to the Public Data Network (PDN) or to other equipment adhering to X.25 or Frame Relay procedures.

X.25 DTE and DCE Logical Appearance

Since the majority of X.25 backbone equipment has a DCE appearance, the Vanguard is normally set to exhibit an X.25 DTE logical appearance on the X.25 trunk. When interconnecting a Vanguard device to some types of network equipment, you may have to set up the device to operate as an X.25 DCE.

In addition to the DTE or DCE logical appearance setting, both the Vanguard let you tune the trunk parameters (frame window, packet window) to match the characteristics of the X.25 network. The SDLC calls are established over the X.25 links using Autocalling.

For information on setting up Autocalling, refer to the “Configuring a Node for SDLC Operation” section on page 32.

X.25 Support

Vanguard products support the 1980 and 1984 CCITT X.25 Specification.

X.25 Packet Handling for SNA

All data transmitted over the X.25 trunk is in packet form.

For SNA connections, a Vanguard device forwards a frame to the network using one or more packets. That is, upon receipt of a complete SNA frame, a Vanguard device forwards as many packets as needed to accommodate the complete SNA frame. If the frame size exceeds the packet size, the Vanguard sets the M-bit to indicate a continuation of the frame.

For SNA connections, 1024-byte packets are recommended.

SDLC-to-LLC2 Conversion

What Is It?

The SDLC option lets you convert SDLC data traffic to LLC2 data traffic and pass these frames from X.25 and Frame Relay networks, across your local LANs and into IBM Front End Processor units.

SDLC-to-LLC2 LAN Conversion (also referred to as SLAC for X.25 or LSC for Frame Relay) converts serial SNA traffic, such as TPAD-SDLC, into LLC2 Token Ring, as shown in Figure 31, or Ethernet traffic for X.25 and Frame Relay networks.

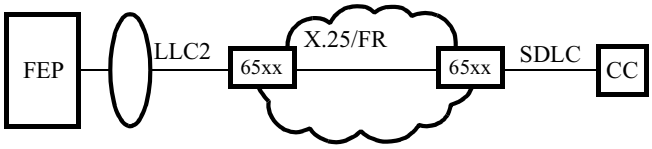

Figure 2. Example of SDLC-to-LLC2 LAN Conversion

For more details on SDLC-to-LLC2 to Conversion, refer to the “SDLC-to-LLC2 Conversion” section on page 66.

Autolearn for LLC2 Conversion

Overview

SDLC-to-LLC Conversion stations automatically learn the MAC addresses of remote physical units (PUs) Type 2 or 2.1. This means Vanguard products automatically recognize PUs attached over Ethernet or Token Ring LANs without manual configuration of the PU's MAC addresses within the LLC-SDLC station table of a Vanguard. This allows you to install remote PUs in your network without configuring their MAC address in Vanguard products.

Example

Figure 3 shows a sample network using Autolearn to automatically discover remote PUs MAC addresses. It also shows the critical parameters you need to set to enable Autolearn. These parameters are configured on the Vanguard Node B. The external MAC Address entry for Vanguard Node B must be set to 00:00:00:00:00:00 to enable Autolearn on the LLC2 conversion stations.

■Note

Devices of different PU types attached to the same LAN port must have unique internal MAC addresses assigned in the LLC-SDLC Station Table. See the table provided in Figure 3.

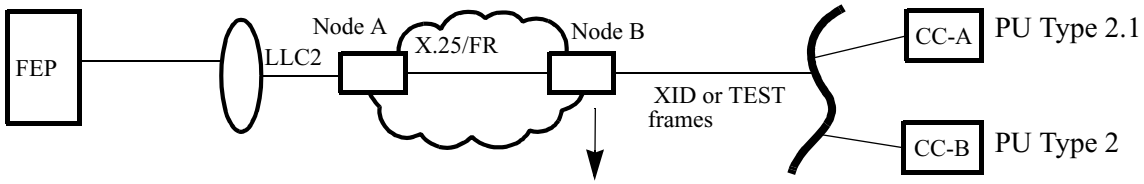

LLC-SDLC Station Table

Entry #: 1	Entry #: 2
External MAC Address: 00:00:00:00:00:00	External MAC Address: 00:00:00:00:00:00
Internal MAC Address: 40:00:00:00:00:0A	Internal MAC Address: 40:00:00:00:00:0B
Internal SAP: 04	Internal SAP: 04
External SAP: 04	External SAP: 04
External PU Type: 2.1	External PU Type: 2
Initiate Test Frame: OFF	Initiate Test Frame: OFF
QLLC Station Address: 01	QLLC Station Address: 01
Autocall Mnemonic: nodeA1	Autocall Mnemonic: nodeA2

Figure 3. Example of Autolearn for LLC2 Conversion

The cluster controller (CC) connected to the Ethernet LAN begins the session and sends XID or TEST frames to the internally configured MAC address of Node B. The cluster controller includes its MAC address in the XID or TEST frame, so Node B learns the MAC address of the cluster controller.

When the remote PU disconnects, the Vanguard 6560 conversion station is available for the next PU unless the LLC option is set to SAVELEARNED. If the LLC option has been set to SAVELEARNED the Vanguard 6560 stores the learned external MAC Address in CMEM. This learned address remains in CMEM until the external MAC address in the LLC-SDLC Station Table is manually changed back to 00:00:00:00:00:00.

Supported Platforms

These platforms support Autolearn for LLC2 Conversion stations:

- Vanguard 6400
- 6500*PLUS*
- Vanguard 6520
- Vanguard 6560
- Vanguard 300/305
- Vanguard 320
- Vanguard 34x
- Vanguard 7300

For More Details

For details on how to configure Autolearn for LLC2 Conversion, see the "Configuring Autolearn for LLC2 Conversion" section on page 74.

Enhanced Group Polling

Introduction

The Enhanced Group Poll feature reduces polling overhead in IBM applications with a large concentration of Physical Units (PUs).

This feature improves the throughput of a Front End Processor (FEP) port by reducing the number of unproductive polls. This is accomplished by assigning multiple PUs to a single group address so that all PUs on a single line can be polled with a single poll code.

Vanguard support of this feature lets you concentrate a number of SDLC stations (up to 64 per port) into one or more of these groups on the HPAD node. This means you can configure multiple groups per Vanguard HPAD port.

Group Polling support is available for PU Types 2.0 or Type 2.1.

Refer to the “Configuring SDLC Station Record” section on page 39 for parameter descriptions for Group Poll.

Group Poll Addressing

PU Types 2 and Type 2.1 devices may be included within the same group address.

Configuring Group Poll

To configure the Group Poll feature on the Vanguard, configure the Group Address parameter in the SDLC Station record:

Group Address = (valid station address 0x01-0xFE)

This parameter appears after the Station Address parameter which is listed in the SDLC Station Record.

SNA Dial on Demand

Introduction

SNA Dial on Demand allows a Vanguard to initiate a call or establish a connection only when data transfer occurs. Typically, a link or connection stays up even during periods of idle data traffic. SNA Dial on Demand significantly reduces bandwidth usage by clearing the link when there is no data to be sent. This action, however, remains transparent to the end devices and the Vanguard will continue to poll the end device for data traffic.

How SNA Dial on Demand is Implemented

Using the SNA Dial on Demand feature, the Vanguard will initiate a link idle timer upon completion of data transfer. If no data transfer occurs and the link idle timer expires, the Vanguard clears the call. The Vanguard will continue to poll locally attached devices for data traffic and re-initiate the call when data must be sent.

SNA Dial on Demand also allows a Vanguard to periodically place calls to a remote device to check if any data must be sent. To use this feature, the Verify Connection Timer must be set. This verification is typically used in modem huntgroup applications, where the connection to the remote device must be verified.

Support on Switched Service Networks

SNA Dial on Demand supports switched service networks including X.25, ISDN, POTs and switched 56K service.

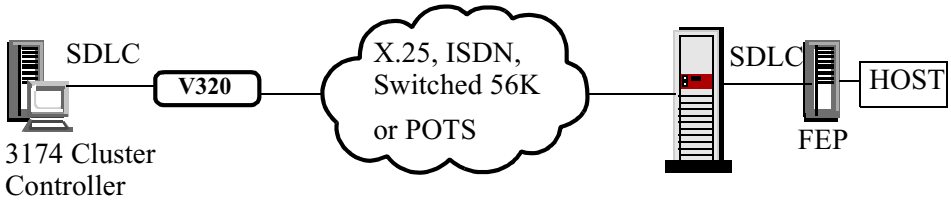

Figure 4. Switched Service Network Support

Supported Platforms

These platforms support SNA Dial on Demand:

- Vanguard 6400, 6560, 6520, 320, 305, 300, and 34x
- 6500*PLUS*

Support for SDLC-to-LLC2 Conversion

You can apply SNA Dial on Demand to all combinations of LLC2, SDLC and XDLC currently supported by SDLC-to-LLC2 conversion and SDLC/XDLC TPAD and HPAD functionality.

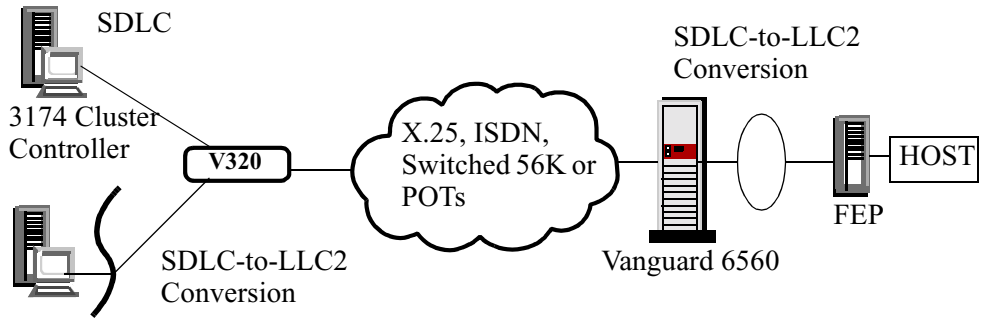

Figure 5. SDLC and/or LLC2 Support

Applications

SNA Dial on Demand can be used in situations where you do not want to terminate connections between remote controllers and hosts, and at the same time reduce bandwidth usage when there is no data transfer.

Example Banking Application

The SNA Dial on Demand feature can be used on a Vanguard to support Automated Bank Machines (ABM). Some ABMs lack the capability to signal a modem to dial at the beginning of a transaction and hang up when the transaction is complete. A Vanguard can be used to signal the modem to dial or disconnect.

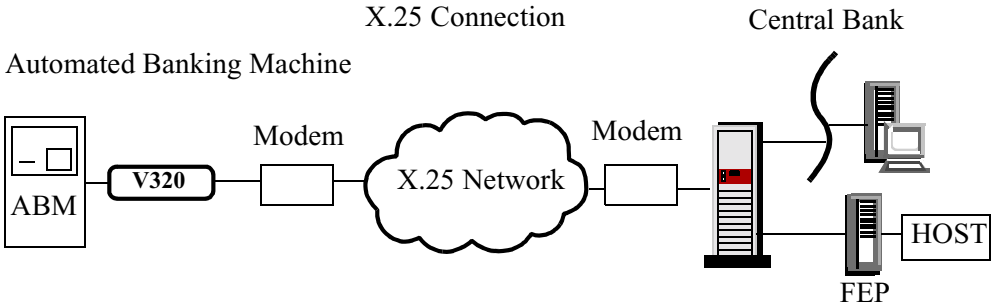

Figure 6. SNA Dial on Demand over an X.25 Link

When a transaction begins, the Vanguard initiates an X.25 circuit and generates signal to dial the modem. Once the Vanguard establishes the connection, the X.25 switched virtual circuit remains active for the duration of the transaction. Once data transfer is complete, the Vanguard clears the X.25 call and terminates the modem connection.

Although the X.25 connection clears, the Vanguard continues to poll or spoof the local end devices for data traffic, as shown in Figure 7. Call clearing remains transparent to the end device because the SDLC link remains active.

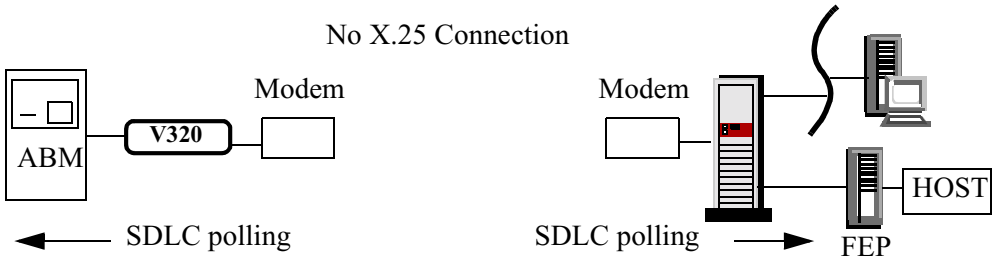

Figure 7. Local Polling

Special Considerations for 3745 Communication Controllers

The Vanguard keeps the SDLC link active by sending RNR to the attached controllers or hosts. The host, however, will only accept RNR for a limited period of time. This depends on the version of Network Control Program (NCP) residing in the host and this time can be up to 90 minutes. Therefore in order to use SNA Dial on Demand, you may be required to change the “RNRLIMIT” timer value in the NCP.

Note

The maximum value in NCP Version 7 Release 3 is 70 minutes.

Configuration

To support SNA Dial On Demand, configure these parameters for the SDLC Station Record or SLAC Station Table Record:

Parameter	Description
Call Timer	Specifies the time before the next call is made. **Note** To prevent call collision when stations send data at the same time, configure different call timers at each endpoints.
Link Idle Timer	Specifies the time to wait for a data frame before clearing the link. **Note** Configure this parameter on one side or both sides of the link. The timer with the short timer expires first and suspends the link Configuring Link Idle Timer on both sides allows each side to initiate a call when there is data to be sent. Configure Autocall Mnemonics on both sides.
Verify Connection Timer	Used to periodically verify that the connection to the remote station is still active even after the link has been suspended. This timer specifies how long the station waits before verifying the connection.
Unsuspend Wait Timer	Used to determine how long the station will wait in LINK_UNSUSPENDING state after receiving a call request before bringing the station down.

For descriptions of the parameters, refer to “Configuring SDLC Station Record” section on page 39 and “LLC-SDLC Station Table Parameters” section on page 98.

Configuring SNA Dial on Demand with Data Connection Protection

When using Data Connection Protection (DCP), autocall mnemonics must be configured for the SLAC, SDLC, or XDLC stations on both HPAD and TPAD stations.

SNA Dial on Demand and Hunt Groups

The Dial on Demand feature cannot be used with Hunt Groups.

Configuration Example

Figure 8 shows two Vanguards connected over a X.25 network. This configuration allows either endpoints to initiate the call and therefore an autocall mnemonic is configured for each side. The call timer is set to different values at each end point. This prevents call collision where the endpoints initiate the calls at the same time. The Idle Timer is configured for Node 200 only, so only this remote node can clear the call.

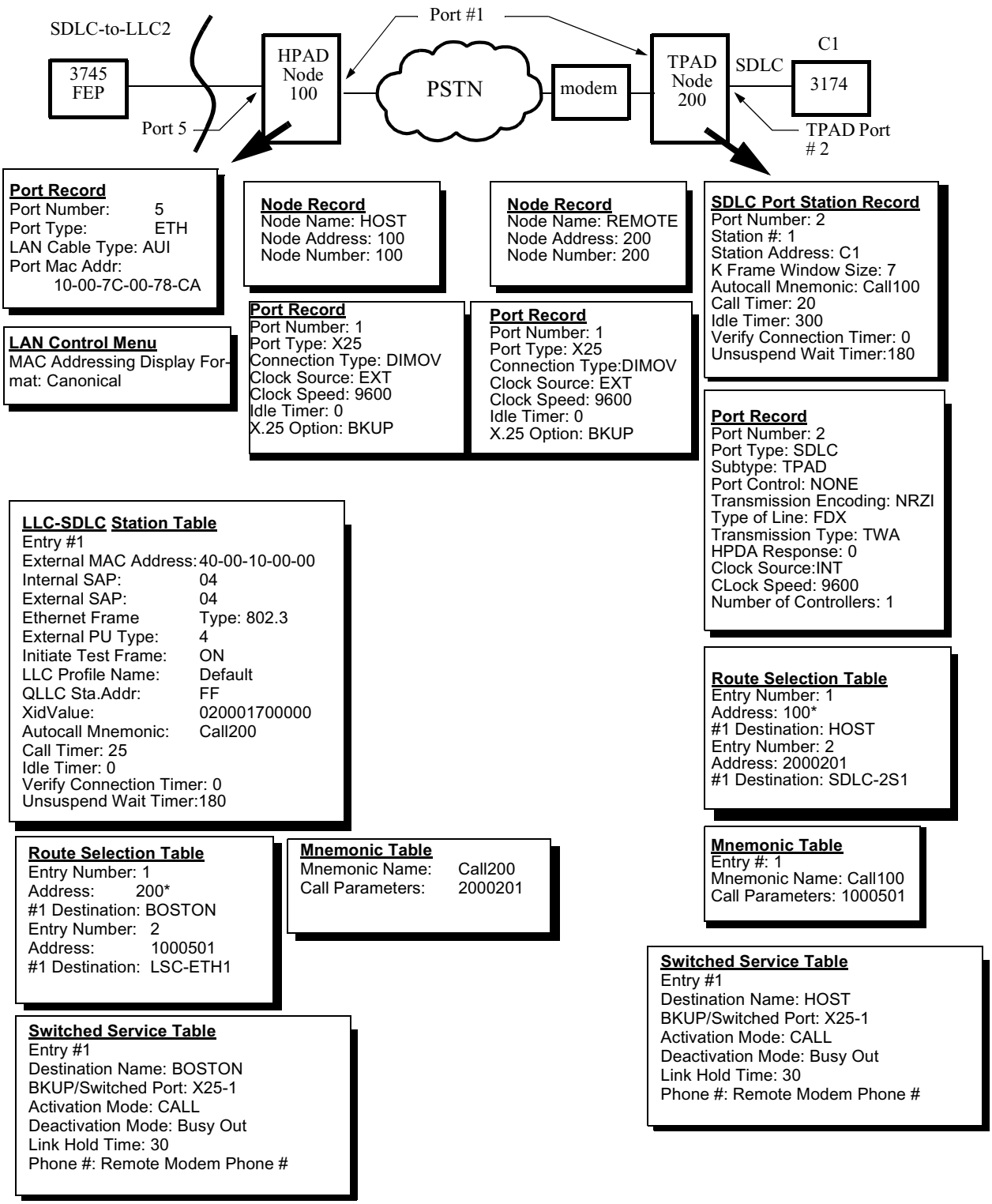

Figure 8. Dial on Demand Configuration Example

SDLC and LLC2 Data/Connection Protection

What Is It?

This feature provides Data/Connection Protection on SDLC and LLC2 data circuits.

- In the event of a link failure, the Connection Protection feature protects the network connection between the two SDLC or LLC2 end points. When the connection recovery process is executed, you are not aware of the event, except for cases where the new path involves resources of different capability.
- In the case of Data Protection, a transport element is added to the protection mechanism. This element corresponds to the transport layer of the OSI stack and maintains data integrity from one end of the connection to the other. A copy of the transmitted data is retained at the source. When the destination acknowledges receipt of the data, the source deletes the copy. If the destination detects loss of a user data packet, it requests that the source re-send a copy of the data packet.

See the “SDLC Station Record Parameters” section on page 40 for details on parameters used to configure this feature.

Note

You can apply Data/Connection Protection functionality to any combination of SDLC or LLC2 circuits. That is:

- SDLC-to-SDLC circuits
- SDLC-to-LLC2 circuits
- LLC2-to-LLC2 circuits
- LLC2-to-SDLC circuits

Synchronous Device Support

Introduction

The primary application for Vanguard is to support SNA cluster controllers over an X.25/Frame Relay backbone in an IBM network. IBM architecture refers to these cluster controllers as PU TYPE 1 and PU TYPE 2 devices.

Mainframe sites that support SDLC protocol for remote devices may have varying configurations of hardware and applications software, but usually the SDLC support requirements remain constant, with only minor exceptions.

Limitations

You can configure your Vanguard to support a variety of SDLC applications, subject to the following maximum limits:

- 64 PUs per HPAD or TPAD line

Mainframe Support

Some of the supported medium to mainframe CPUs include:

- Medium - 4300s (4331, 4361, and 4381), 9370
- Large - System 360, System 370, 3030 Series, 3090 Sierra
- Miscellaneous - 8100 Information System
- AS/400 Midrange Series

Vanguard does not support SDLC Loop, TWS, Extended Sequencing, or SIM and RIM applications for SDLC operation.

Remote Equipment Support

Remote equipment can access the mainframes through an IBM FEP with EIA 232-C (V.24), V.35, X.21, and RS-530 connections. When you add a Vanguard to an SDLC network, the remote equipment benefits from X.25 or Frame Relay connections by providing the polling and poll responses locally rather than by passing poll and poll response frames across the network.

Examples of remote devices supported by the Vanguard include:

- IBM 3274 or 3174 SDLC cluster controller
- IBM 3276 SDLC cluster controller
- IBM 3767
- 8100 information system (distributed processing)
- Any PU Type1 or any PU Type 2 or PU Type 2.1
- A Personal Computer (PC) running emulation software

Broadcast XIDs

Introduction

The Broadcast XID feature (FFBF) for the SDLC option lets you configure the SDLC TPAD node to act as a dial-in line for secondary stations. This lets a TPAD node poll secondary stations with a broadcast address until it receives a response address.

This feature is configurable from the SDLC Port Option on the Port record.

Requirements

Adhere to these requirements before you use Broadcast XIDs:

- Set the number of controllers for the TPAD port at 1.
- Do not select QLLC option XIDs for the configured controller.

Note

The configured station address is ignored on the SDLC port; it is used as the QLLC address.

How You Implement It

To enable the Broadcast XID option, type **FFBF** at the SDLC Port Options: prompt on the SDLC Port record.

After You Implement It

After you enable Broadcast Polling, the SDLC TPAD port functions as follows:

- After you boot a port, node or station, the SDLC TPAD port polls the associated SDLC line with a Broadcast Null XID (FFBF).
- After the SDLC TPAD receives a response XID from a secondary station with a station address other than FF, the TPAD uses the station address contained in the response to poll that secondary station.

Broadcast Polling Resumes

Broadcast Polling resumes if one of the following events occurs:

- If the secondary station stops responding, the TPAD port resumes polling with the Broadcast XID.
- Once a logical link is established and then broken, the TPAD port resumes polling with Broadcast Null XIDs until it receives a response from a secondary station with an address other than FF.

Note

With the Broadcast XID option enabled, the TPAD station always tries to initiate the SDLC logical link using a Broadcast Null XID.

Refer to the “SDLC Port Record Parameters” section on page 34 for details on configuration parameters for this feature.

RFC1490 Multiplexing De-Multiplexing for SNA

What Is It?

This feature provides SDLC support for muxing of IP/IPX and SNA data traffic over a single Data Link Connection Identifier (DLCI) for RFC1490.

IBM NCP 7.3 allows IP and SNA encapsulation for RFC1490 on a single DLCI, as shown in Figure 9. The SDLC option supports this feature by letting Vanguard products use a single DLCI to pass SDLC/LLC traffic and IP or IPX traffic over a Frame Relay network.

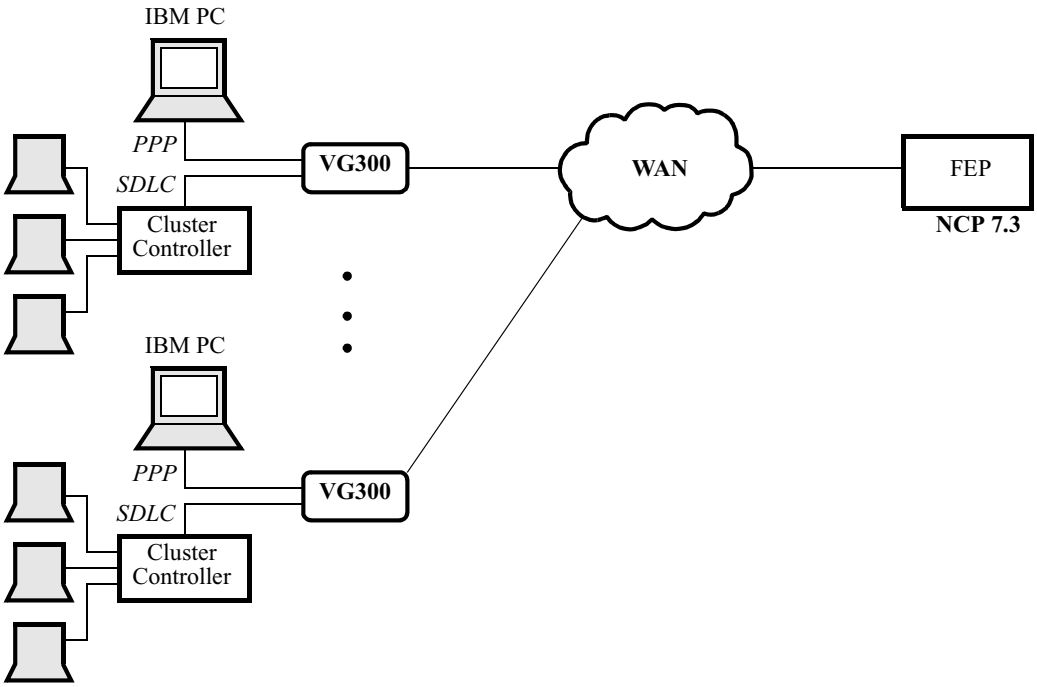

Figure 9. NCP 7.3 Support for IP and SNA Encapsulation

Previously, you could pass data traffic from more than one protocol on a Vanguard configured for Annex G, but for a BYPASS station you needed to configure a DLCI for each protocol you forwarded to the other side of the network. You could not combine IP or IPX traffic with SNA traffic on a BYPASS station.

Now, RFC1490 Multiplexing De-Multiplexing for SNA/IP/IPX makes it possible to combine IP or IPX traffic with SNA traffic on a single DLCI. This saves the cost of additional DLCIs when sending SNA/IP/IPX traffic through a Frame Relay network using BYPASS stations, and you have complete compatibility with NCP 7.3.

FRISNA String

To enable passing two types of traffic on a Frame Relay BYPASS station, RFC1490 Multiplexing De-Multiplexing for SNA/IP/IPX introduces a new string: FRISNA. When configured in the PVC Setup table as the SNA traffic source for the host side Frame Relay station, this string routes SNA traffic away from the IP or IPX traffic on the common DLCI to another FRI destination, as shown in Figure 10.

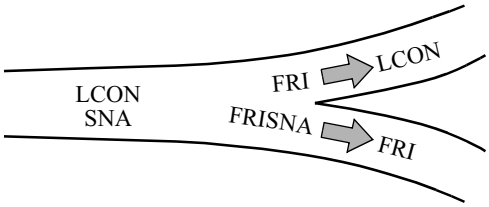

Figure 10. Example of FRISNA String Diverting SNA Traffic to Another FRI Destination

Sample Application

Figure 11 shows how to use RFC1490 Multiplexing De-Multiplexing for SNA/IP/IPX to pass IP traffic and SNA traffic across a Frame Relay BYPASS station using a single DLCI and a Vanguard 300 and Vanguard 6520 at either end of the network.

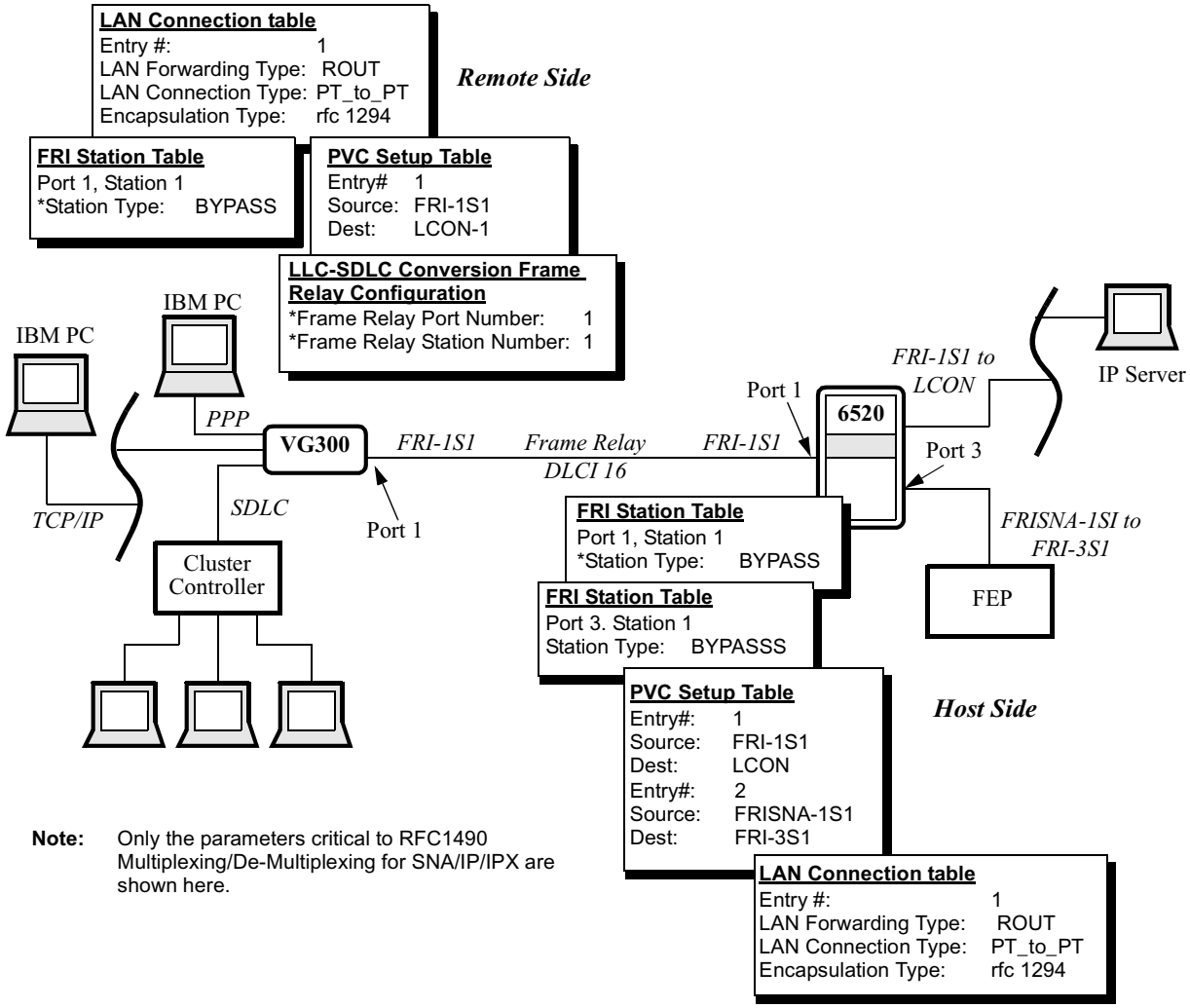

Figure 11. Example of Single DLCI Multiplexing and De-Multiplexing SNA/IP/IPX Traffic

What You Need to Configure

As shown in Figure 11, with RFC1490 Multiplexing De-Multiplexing for SNA/IP/IPX, you can configure an LCON and an LLC-SDLC Frame Relay station on the same Frame Relay BYPASS station in the Vanguard. device.

In the Vanguard on the host side, you can configure Entry #1 of the PVC Setup table for IP traffic. Then, you can configure Entry #2 in the PVC Setup table for the SNA traffic. At the Source parameter, use the string FRISNA-1S1. At the destination parameter, use the string FRI-3S1. This strips SNA traffic from FRI port 1, station 1, off the common DLCI and forwards it to the FRI link configured as the destination FRI port 3, Station 1.

■Note

In your own application, the order in which you configure IP or IPX traffic and SNA traffic does not matter for Entry #1 or #2 in the PVC Setup table.

Hunt Group Feature

Introduction

This section describes the Hunt Group feature for SDLC-to-LLC2 Conversion running on Token Ring, Ethernet, and Frame Relay stations.

For details on SDLC-to-LLC LAN Conversion and configuring Hunt Group, see the "SDLC-to-LLC2 Conversion" section on page 66.

How It Works

Hunt Group routes multiple X.25 or Annex G Frame Relay calls to the first available SDLC-to-LLC Conversion server. This means you can configure your network so that multiple X.25 or Frame Relay call originators, such as cluster controllers, can place calls to the same address simultaneously.

As long as one or more of the conversion stations belonging to the Hunt Group are available and ready to receive calls, the address, which must be a group address, will accept incoming calls and route them to the next available SDLC-to-LLC2 Conversion station.

If none of the conversion stations belonging to the Hunt Group are available, SDLC-to-LLC Conversion clears the call.

SDLC-to-LLC Conversion stations belonging to the Hunt Group can accept calls independently, but only if a call is directly routed to that station and no group call is already placed to the station.

Example

Figure 12 shows an example of a typical Hunt Group application.

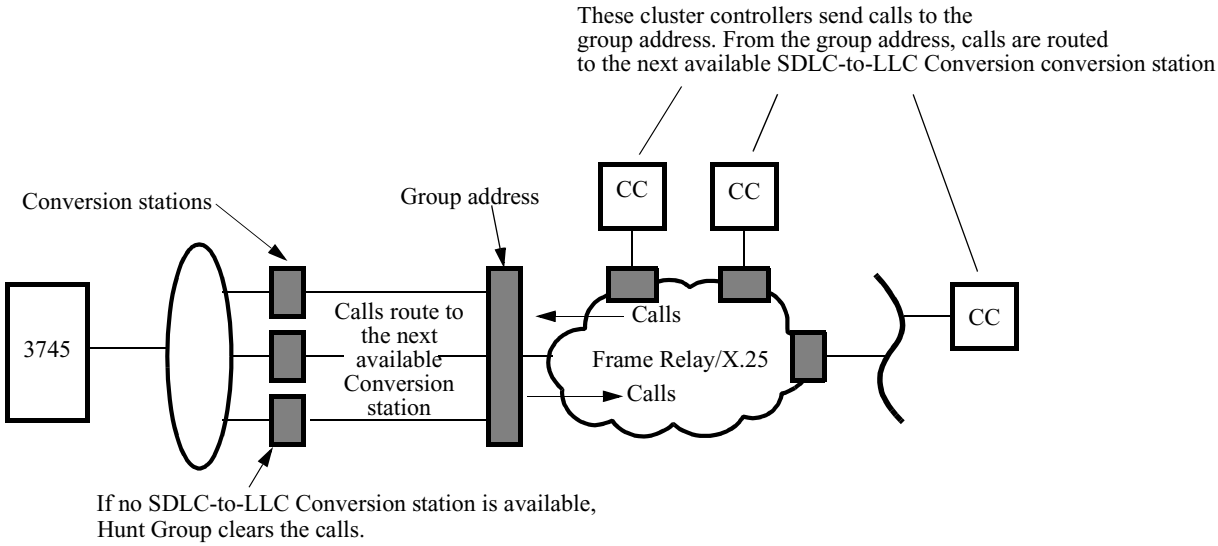

Figure 12. Example of Hunt Group Operation

Hunt Group Type

You can define the following types of Hunt Groups on a SDLC-to-LLC Conversion station:

- Primary QLLC stations
- Secondary QLLC stations

Generally, you define a primary Hunt Group if a SDLC-to-LLC Conversion station's QLLC address is set to FF. If the QLLC address for the station is a secondary address, then define a secondary Hunt Group for the station. However, the Hunt Group type you assign to a station has no effect on the station's functionality or the way the Hunt Group behaves. Assigning primary and secondary values to Hunt Group members lets you organize your groups more effectively.

Hunt Group Number

After you define the type of Hunt Group you want to use, you can define up to three different Hunt Groups per type:

- Primary 1, 2, and 3
- Secondary 1, 2, and 3

This lets you configure up to six different Hunt Groups per SDLC-to-LLC Conversion station type, for example, Ethernet, Token Ring, or Frame Relay.

What You Need to Configure

You can configure a SDLC-to-LLC LAN Conversion station for Hunt Group operation during initial configuration or you can add Hunt Group functionality to a previously configured station You need to configure parameters in the following table and record on each station you want to include in a Hunt Group:

- LLC to SDLC Station record
- Route Selection table

Refer to the "SDLC-to-LLC2 Conversion" section on page 66 for details on configuring SDLC-to-LLC LAN Conversion with Hunt Group.

Direct Calls to Conversion Stations

Hunt Group lets you route calls directly to specific SDLC-to-LLC Conversion stations as always, but you can make sure the call is routed to the next available station if the station you selected is not available.

Just configure an entry in the Route Selection Table for the SDLC-to-LLC Conversion station you want to directly route to, as you normally would. Then, configure an additional entry for Hunt Group. Assign a Hunt Group identification string, for example, LSC-TRP2, at the #1 Destination: parameter. Give the Hunt Group entry a higher priority at the #1 Priority: parameter, than the entry for the direct route. This lets you route calls directly to the conversion station in the first entry, but if that station is unavailable, the Hunt Group in the second entry will take the call.

A Note About XIDs

When using Hunt Group, always let the XIDs pass through your network from a remote device, rather than configuring XIDs at the Host side of your network. This enhances the security of your network by limiting the passing of XIDs in your network from remote devices. It ensures that the device placing the call has its XID configured in VTAM.

For a station to be in the ready state (able to accept a hunt group call) a contact XID response or command must be received from the external station. Therefore, you should set the initiate test option to on, especially when the external station is of type 4.

BAN Frame Format Support for Conversion

Overview

IBM NCP 7.3 introduced Boundary Access Node (BAN) functionality for the 3745/46 Front End Processors. BAN lets the 3745/46 interface with Frame Relay 1490 with an NLPID (Network Level Protocol ID) and frame format of a bridged 802.5 frame, referred to as BAN Frame Format. This means you can pass WAN traffic directly into a IBM FEP, without a router or bridge on the host side.

Beginning with Release 4.90 of Vanguard operating software, Vanguard products support the BAN frame format for use with Frame Relay LLC to SDLC Conversion. This means you can pass Frame Relay LLC conversion traffic from remote LANs across a WAN directly into the IBM FEP without using a local router or bridge on the FEP side of the network. See Figure 13 for details on this implementation.

If you want to keep the router on the host side attached to the FEP, it is still advantageous to use the BAN frame format because it lets you go beyond the 64 station limitation for Vanguard. BAN does this by converting the LLC traffic into BAN frame format and passing the traffic into a host side Vanguard 6520 configured for RFC1294 Source Route Bridging. See Figure 14 for more details on this implementation.

New BAN Frame Format Parameters

These parameters have been added to the Frame Relay LLC Station Table to support the BAN frame format on Vanguard products:

- Encapsulation Type
- Boundary Node Identifier (BNI)
- BAN DLCI MAC Address
- Frame Relay DLCI Virtual Ring Number

For details on the parameters used to set up BAN Frame format support, refer the “LLC-SDLC Station Table Parameters” section on page 98.

Guidelines for BAN Configuration

Adhere to these guidelines for BAN operation:

- BAN is supported for Permanent Virtual Circuits (PVC) connections only, so you must configure a PVC connection for BAN operation.
- BAN is supported for BYPASS station type only on Frame Relay stations. If your conversion station type is configured as Annex_G, you must switch to BYPASS to perform BAN operation.
- Configure the LAN Forwarder Type in the LAN Connection Table on your host side bridge node for BROUT if you want to perform remote access to the BAN station node using IP/IPX/Telnet.
- The Virtual Ring Number configured in the Bridge Link Table of the Bridge node must match the Frame Relay Virtual Ring Number configured in the LLC-SDLC FR Station Table on the node running BAN.

Examples

This section provides conceptual illustrations of BAN operation. For detailed configuration examples of BAN applications see the “BAN Frame Format Conversion Examples” section on page 79.

Figure 13 shows three remote conversion nodes passing different types of traffic across a Frame Relay WAN, directly into the IBM FEP on the host side of the network. This implementation lets you eliminate the need for a LAN-attached router on the host side, resulting in significant hardware cost savings.

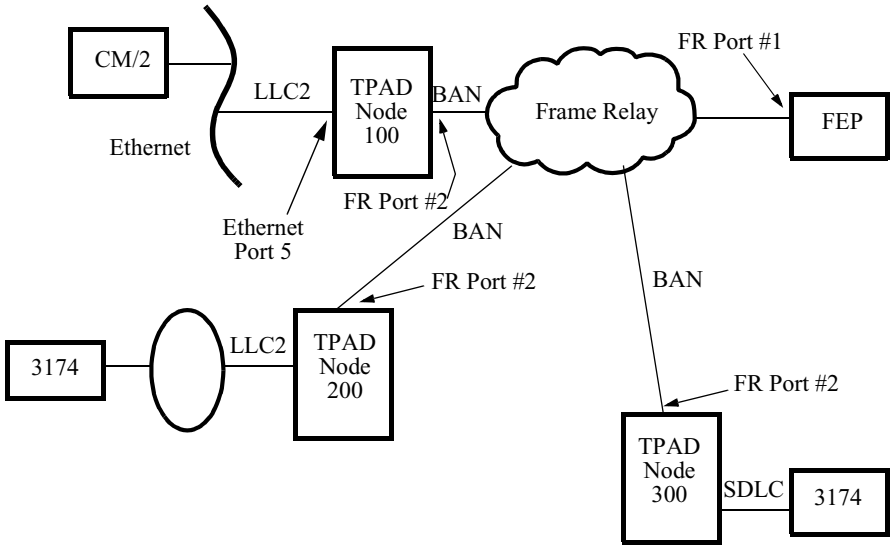

Figure 13. Example of Remote SDLC-to-LLC Conversion to RFC1490 BAN Frame Format Directly into a IBM FEP

Figure 14 shows another mulitpoint application that passes Token Ring LLC, Ethernet LLC, and SDLC traffic from three different conversion nodes, across a Frame Relay WAN to an IBM FEP. The LAN traffic and SDLC traffic is converted to BAN frame format at the conversion node on the TPAD sides of the network. The converted BAN frames then pass through the WAN, onto the Token Ring-attached router on the host side of the network, and on to the FEP. The significance of this example is that BAN support lets you eliminate Vanguards 64 station limitation.

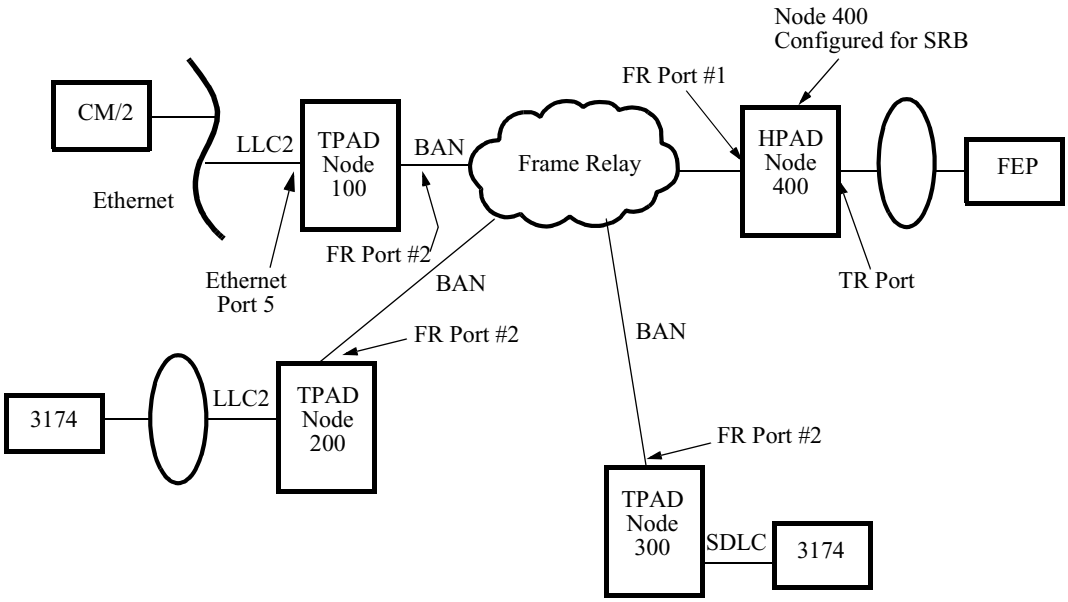

Figure 14. Example of Using BAN To Exceed 64 PU Limitation

How to Configure BAN Support

You configure BAN Frame support for Frame Relay conversion the same way you configure other types of conversion operations. Follow these steps:

Step	Action	Result
1	Select **Configure -> LLC to SDLC Tables -> Frame Relay Station Table** from the CTP Main menu.	LLC-SDLC Conversion Frame Relay Station Configuration table appears.
2	Enter **BAN,** at the 1490 Encapsulation parameter, and press Return.	BAN MAC Address: parameter appears.
3	Fill out the BAN MAC Address parameter.	BNI MAC Address parameter appears.
4	Fill out the BNI MAC Address parameter.	Frame Relay DLCI Virtual Ring Number appears.
5	Fill out the Frame Relay DLCI Virtual Ring Number parameter.	The next table parameter appears.
6	Enter **;** and press Return.	This saves your changes.
7	Perform a Node boot.	This implements your changes to the LLC-SDLC Conversion Frame Relay Station Configuration table.

Configurable Internal MAC Addresses

What Is It?

The Internal MAC Address parameter on the LLC-SDLC Station Record lets you configure multiple MAC addresses for conversion stations where LLC2 multiplexing has a limitation.

Normally there is a 58 station limit per port using LLC2 multiplexing protocol when connected to an IBM Front End Processor (FEP). The Configurable MAC Address feature makes it possible to go beyond Vanguards 58 station limitation in an IBM FEP application.

See the "LLC-SDLC Station Table Parameters" section on page 98 for the parameter used to configure the Internal MAC Address feature.

Note

Copying a conversion station record with an internal MAC address configured causes the internal MAC address to increment automatically.

Memory Requirements

Support for configuration of more than the standard 58 stations per port require an additional four Megabyte (MB) of DRAM in a node.

Example

Figure 15 shows a Vanguard, configured with multiple internal MAC addresses, connected to an IBM Front End Processor over a Token Ring.

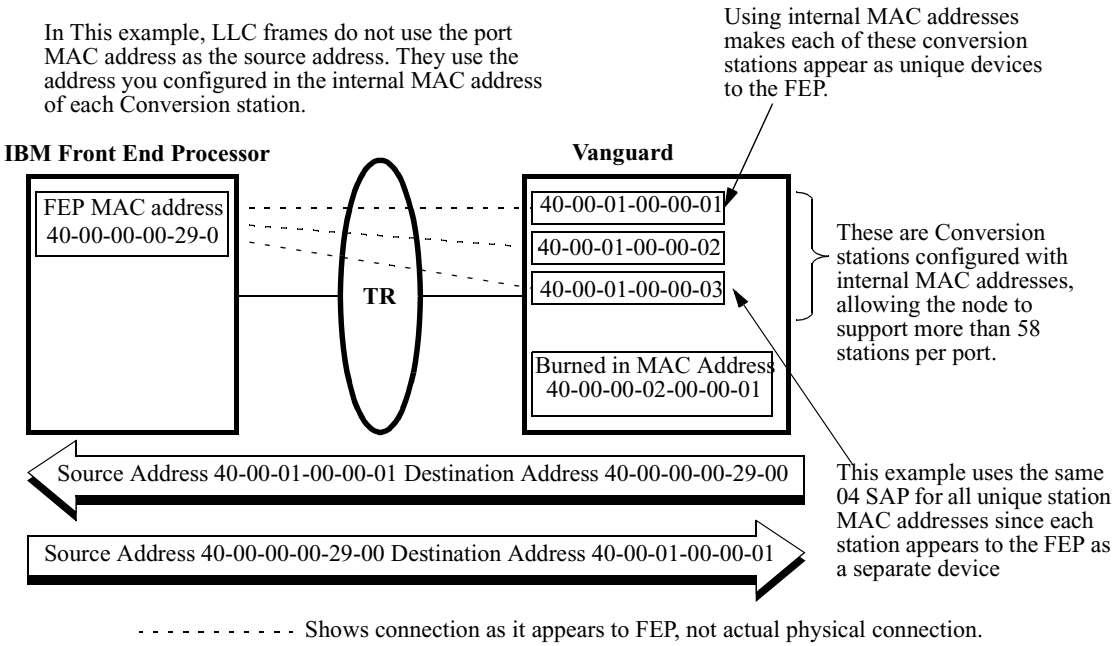

Figure 15. Example of Configuring Multiple LLC-SDLC MAC Addresses Per Port

Call Establishment

How a Connection for Calling Is Made

When SDLC is in operation, a connection is established between the host side or HPAD PU (Vanguard) and a terminal PU or TPAD node (Vanguard) using either a Switched Virtual Circuit (SVC) or a Permanent Virtual Circuit (PVC).

Requirements for Incoming Calls

There are two requirements that must be met for the HPAD and TPAD to accept incoming calls:

- When configured to receive the call, the call is accepted only if the HPAD has been polled by the host and the TPAD has received a response to a poll.
- The protocol ID in the call packet must match the value configured in the station record. For call connections to an FEP running NPSI, the protocol ID in the call packet sent by the TPAD must match the protocol ID for QLLC in the FEP configuration for the X.25 line.

Requirements for Outgoing Calls

When the calls originate from the TPAD or HPAD, the call information is supplied by the mnemonic configured in the SDLC Port Stations Table. When the call is initiated by the HPAD, an XID or SNRM frame received by the HPAD causes the call to be initiated using the call parameters defined for the mnemonic in the Autocall Mnemonic Table.

Once the call is initiated, the HPAD tries 5 times every 5 seconds to establish the call. After these attempts, the HPAD attempts a call once every minute. The Route Selection Table is used to route the call to the appropriate ports across the network.

If the host stops polling the HPAD, the HPAD discontinues its attempt to connect the call. Once the host resumes polling, the HPAD resumes its attempts to connect the call.

The TPAD can also initiate calls. Once the controller responds to a poll (XID or SNRM command) the TPAD attempts to establish the X.25 or Frame Relay call in the same fashion as the HPAD.

■Note

Only one end of the SVC can have the mnemonic configured.

Call Clearing

Introduction

A call clear may be initiated by the HPAD, the network, or the TPAD, after a call has been established.

Calls cleared by the HPAD or TPAD contain cause and diagnostic codes.

Network or TPAD Clears Call

A call clear may be received from the network at any time.

When a call clear is received, the HPAD changes the PU status to DISC and sends a Disconnect Mode (DM) frame to the host at the earliest opportunity. The call may be reestablished by the HPAD when the host sends the SNRM or XID frame to the PU, and when the autocall is enabled for that PU.

The TPAD automatically clears the call if:

- DM is received
- PU is disabled
- PU is down (timeout)

HPAD Clears Call

A call may be cleared automatically by the HPAD under the following conditions:

- The HPAD receives the DISC frame from the host.
- The PU is disabled by the Control Port.
- The PU is down. A PU in the HPAD is considered down when it is not polled by the host for a period of time specified in the Poll Timer and Tries parameters in the SDLC Port Record.
- An SNRM is received from the host while in normal response mode (NRM).
- An activation XID (illegal frame) is received.

Configuring a Node for SDLC Operation

Introduction

To set up a Vanguard for SDLC operation, configure the following:

- SDLC Port Record
- SLDC Station Table record

Note

This assumes your Vanguard node is already configured for normal LAN/WAN operation. For details on configuring your node for LAN/WAN operation, refer to the *Vanguard Configuration Basics Manual*, Part Number T0113.

Example

Refer to the "SDLC Configuration Example" section on page 47 for a detailed example of configuring the SDLC option for a HPAD/TPAD implementation.

Configuring the SDLC Port Record

Follow These Steps...

Follow these steps to display the SDLC Port record from the CTP.

Step	Action	Result
1	Select **Configure -> Port** from the CTP Main menu.	The Port Number parameter appears.
2	At the prompt, enter the number of the port you want to configure and press **ENTER**.	The Port Type parameter appears.
3	Type **SDLC** and press **ENTER**.	The parameter for the SDLC Port record appear in sequence. **■Note** When an asterisk appears beside a parameter on a record, a Node Boot is needed for any changes to that parameter to take effect.
4	See "SDLC Port Record Parameters" for details on the values and descriptions of parameters.	

Online Help

Entering a **?** displays online Help for the current parameter option on the screen.

Example

See the "SDLC Configuration Example" section on page 47 for a detailed example of configuring this record.

SDLC Port Record Parameters

Parameters

The SDLC Port record contains these parameters. Parameters identified by an asterisk require that a Node boot be performed for changes to the parameter to take effect.

■Note

If you have enabled Ease of Configuration, you need to boot only the port to make changes to the parameters marked with an asterisk. For more information, refer to the Ease of Configuration section in the introductory portion of the binder (*SNA Feature Protocols Manual,* Part Number T0101).

Port Number

Range:	1 to 54
Default:	1
Description:	Enter the number of the port to configure. This number is the Port Record reference number.

* Port Type

Range:	NULL, PAD, MUX, X.25, SDLC
Default:	PAD
Description:	Specify the type of port you are configuring. Select SDLC. Type in SDLC for port type.

* Subtype

Range:	HPAD, TPAD
Default:	HPAD
Description:	Indicates the port subtype. Choose: • HPAD - If the port is functioning as a Host PAD. • TPAD - If the port is functioning as a Terminal PAD.

Port Control

Range:	NONE, MB
Default:	NONE
Description:	Specify one of the following port control options: • NONE: No option specified. • MB: Raises Pin 22 when the port becomes disabled.

Transmission Encoding

Range:	NRZ, NRZI
Default:	NRZ
Description:	Specify the data encoding used for this SDLC link: • NRZ - Non Return to Zero • NRZI - Non Return to Zero Inverted

*Type of Line

Range:	FDX, HDX, HDXDCE
Default:	FDX
Description:	Specify the type of line. • FDX: Full-duplex indicates communication is occurring in both directions simultaneously, between devices. This means control signals DSR, DCD, CTS are always held high. • HDX - (Half Duplex) New for 4.90, the HDX SDLC port raises RTS and waits for CTS prior to sending data when it is a DTE. When the HDX SDLC port is a DCE and configured as an HPAD, it raises DCD and waits for PIN 14 to go HIGH prior to sending DATA. When the HDX SDLC port is a DCE and a TPAD, it detects RTS go HIGH, waits RTS TO CTS DELAY ms, and raises CTS. • HDXDCE - (Half Duplex DCE) This option is used on the HPAD when configured as a DCE and the port is interfacing directly to a FEP. When the RTS signal goes HIGH the port raises CTS after waiting a RTS TO CTS DELAY time period. When the RTS signal goes LOW, the port lowers CTS.

Transmission Type

Range:	TWA
Default:	TWA
Description:	TWA is the only transmission type supported.

HPAD Response Delay

Range:	0, 50, 100, 150, 200 ms
Default:	0
Description:	Selecting the default value of zero eliminates the delay period and has no impact on performance.

Clock Source

Range:	INT, EXT
Default:	EXT
Description:	Specify the clocking source to use. Choose: • INT (Internal Clock Source) - If the port device does not provide clocking, usually with a direct connect device. • EXT (External Clock Source) - If the port device generates the clock signal, usually with a tail circuit modem connected to the port.

*Clock Speed

Default:	9600
Range:	1200 to 384000
Description:	This is the port speed in bits per second when using internal clocking. **■Note** Your specific port hardware configuration determines the physical limitations of the clock speed.

Maximum Frame Size

Range:	1024, 4096
Default:	1024
Description:	Indicates the maximum frame size allowed, excluding the frame header and CRC. This enables you to specify frame sizes up to 4096 on the SDLC link.
Boot Type:	A Port boot is required for changes to this parameter to take effect.

*Number of Controllers

Range:	1 to 64
Default:	1
Description:	The number of controllers (PU TYPE 1 or PU TYPE 2, devices) on the SDLC line.

Poll Timer

Range:	1 to 255
Default:	30
Description:	The Poll Timer sets the amount of time that the master waits for a slave to respond to a poll frame. This includes modem turnaround time. The value is in 1/10 per second (i.e., 30 = 3.0 seconds).

Poll Frequency Period

Range:	50 to 250
Default:	50
Description:	Dictates the maximum speed at which the TPAD polls the slaves when no data is being exchanged. For example, a value of 250 ms causes polling at a rate of 4 polls per second. If many PUs (more than 8) are configured for this port, raise the poll frequency period. **■ Note** This parameter is applicable only to TPAD.

Tries

Range:	1 to 16
Default:	10
Description:	Enter the maximum number of attempts to complete a transmission. **■ Note** If the HPAD is not polled for a period of time equal to the Poll Timer times the Tries as configured in the Port Record Configuration, the HPAD will clear the SVC or reset the PVC. If TPAD does not receive poll response for a period of time equal to the Poll Timer times the Tries as configured in the Port Record Configuration, the TPAD will clear the SVC or reset the PVC.

SDLC Port Options

Range:	NONE, MARKi, DMs, DISCs, FFBF,
Default:	NONE
Description:	Specify an option for this port. • NONE: No option specified. • MARKi: Port uses Mark idle between frame exchanges. This option is required by System 36 and AS/400 Series. • DMs: This setting is applicable to the HPAD only. When set, it will not send DMs. When not set, it will send DMs. • DISCs: This setting is applicable to the TPAD only. When set, TPAD will send up to 10 DISCs before sending SNRMs when the station goes down. When not set, TPAD will not pass DISCs. • FFBF: The Broadcast XID option (FFBF) is a new parameter value supported for the SDLC Port Record. It lets you configure the SDLC TPAD node to act as a dial-in line for secondary stations. This lets the TPAD poll secondary stations with a broadcast address until it receives a response address. **■Note** When using PU2.1 HPAD, it is recommended that you set MARKi. For XID3 TPAD, set DISCs.

Port Address

Range:	0 to 15 digits
Default:	(blank)
Description:	When an SDLC port makes a call, this address is inserted into the calling address field.

RTS to CTS Delay

Range:	5 to 200
Default:	10
Description:	This is the delay in milliseconds that the HDX DCE TPAD or the HDXDCE HPAD waits from the time it detects RTS go HIGH until the time it raises CTS. It is accurate to +/- 2 milliseconds.

Configuring SDLC Station Record

Introduction

The SDLC Station Record is used to provide information about the stations attached to an SDLC Port. SDLC stations or PUs are associated with the HPAD and TPAD SDLC ports. Each port can have 64 stations or PUs (representing a cluster controller) attached.

Before You Begin

You must configure the port for SDLC before you access the SDLC Station record to configure parameters.

Follow These Steps...

Follow these steps to configure the SDLC Station Table record:

Step	*Action*	*Result*
1	Select **Configure -> SDLC Port Stations**. from the CTP Main menu.	The Port Number prompt appears.
2	At the prompt, enter the number of the port the station is assigned.	The Station Number prompt appears.
3	At the prompt, enter the number of the station you are configuring.	The SDLC Station Record parameters appear in sequence.

See “SDLC Station Record Parameters” for details on configuring individual parameters.

Online Help

Entering a **?** at a parameter prompt displays online Help for the current parameter on the screen.

Example

See the “SDLC Configuration Example” section on page 47 for a detailed example of configuring this record.

SDLC Station Record Parameters

Parameters

The SDLC Station record contains these parameters:

■Note

Parameters identified by an asterisk requirement a Node boot be performed for changes to the parameter to take effect.

If you have enabled Ease of Configuration, you need to boot only the port to make changes to the parameters marked with an asterisk. For more information, refer to the Ease of Configuration section in the introductory portion of the binder (*SNA Feature Protocols Manual,* Part Number T0101).

Port Number

Range:	1 to 54
Default:	1
Description:	Enter the number of the desired SDLC port that you are connecting to.

Station Number

Default:	1
Description:	Enter the number of stations. The range of Station Numbers is always equal to the number of controllers entered when configuring the port for SDLC operation.

Station Address

Range:	01-FE
Default:	01
Description:	Enter the Station Address of the station that you are configuring. **■Note** Vanguard do not support switched lines. Address FF is not accepted.

Group Address

Range:	(ADDR1): 20 – 7F (ADDR2): 20 – 7F
Default:	(ADDR1): 20 – 7F (ADDR2): 2F
Description:	This is the address for a group of stations that is used by the HPAD for group polling. Addresses 1 and 2 combine to form two hexadecimal digits.

K Frame Window

Range:	1 to 7
Default:	7
Description:	Choose the same value of Frame Level Window for devices at each end of the link. This value should match the value of MAXOUT in the SYSGEN.

Autocall Mnemonic

Range:	0 to 8 alphanumeric characters.
Default:	(blank)
Description:	References an entry in the Autocall Mnemonic Table which defines the remote address and call parameters that will be included in the X.25 Call Packet once polling activity is detected on the SDLC line. The Autocall Mnemonic must be configured on either the HPAD or the TPAD, based on where the call will be originating. **■ Note** Do not configure a Mnemonic at both ends of an SVC.

Protocol ID

Range:	0 to 8 hexadecimal digits
Default:	C3000000
Description:	The protocol ID is the first four bytes of the call user data. If not configured, the PAD will use C3000000 as the protocol ID in the call.

CUG Membership

Range:	0 to 8 two digit numbers
Default:	--,--,--,--,--,--,--,--
Description:	A station may be a member of up to 8 different Closed User Groups (CUGs). Each CUG membership must be a two-digit number (except —). Separate each two-digit number with a comma (i.e., 12,35,56, etc.). No spaces are permitted. **■Note** Configuring the Autocall Mnemonic is sufficient for SDLC. CUG is an X.25 term. Refer to the *Vanguard Configuration Basics Manual* to learn more about the CUG Membership parameter.

QLLC Options

Range:	NONE, CUG, QRRs, XIDs, XID3, RNRs
Default:	NONE
Description:	Used if you do not want XID polling when the port starts. If you set this option, the port begins polling with an SNRM. • NONE: No options specified. • CUG: Check closed user group; otherwise pass call transparently. • QRRs: HPAD sends QRR after QLLC link comes up. • XIDs: Causes the XID parameter defined below to be used for XID exchange. If this setting is not used, the XID parameter (next in sequence) is ignored. The TPAD transparently passes the XID supplied by the controller. • XID3: Pass XID3 transparently between HPAD and TPAD. Allows for PU2.1/XID exchange. This parameter should not be set if XID option is selected. • RNRs: In NRM, TPAD initially polls with RNR until a data packet or until QRR is received by the QLLC station on the TPAD side. • DFC: The station waits the amount of time specified by the call timer before placing the first call.

XID

Range:	0 to 14 hexadecimal digits
Default:	(blank)
Description:	This is the identification sent by the TPAD in response to a QXID when XID is enabled in the QLLC Options parameter.

Station Subaddress

Range:	0 to 3 digits
Default:	(blank)
Description:	This subaddress is used in building the calling address for the Call Packet. It is appended to the Port Address configured in the SDLC Port Record.

Billing Records

Range:	OFF, ON
Default:	OFF
Description:	• OFF: Billing records are not created. • ON: Billing records are created.

HPAD Response Delay

Range:	0, 50, 100, 150, 200 ms
Default:	0
Description:	The time delay between a poll received by the HPAD and its response to the host. Selecting the default value of zero eliminates the delay period and has no impact on performance.

X.25 Network Password

Range:	0-24 hexadecimal digits
Default:	(blank)
Description:	Only TPAD initiated autocall packets use this feature. The X.25. Network Password may be up to 12 bytes long and is inserted in the CUD of the Call Request packet. Padding with spaces must be added as necessary. Configure the Protocol ID to C3 01 00 00.

Traffic Priority

Range:	LOW,MED,HIGH,EXP
Default:	MED
Description:	Specifies the traffic priority of the SDLC station.

Call Timer

Range:	0 to 300 seconds
Default:	0 seconds
Description:	Specifies the time before the next call is made. If 0 is entered, the time to the next call is handled internally. **■Note** Call timer can be configured on one or both sides of the link. If you configure call timers at both ends, specify different times. This prevents call collision.

Maximum Call Attempts

Range:	0 to 255 seconds
Default:	0 seconds
Description:	Specifies the number of times that the SDLC stations attempts to autocall a remote destination. A value of zero will allow unlimited attempts.

Link Idle Timer

Range:	0 to 65534 seconds
Default:	0 seconds
Description:	Specifies the time the SDLC station should wait for a data frame before clearing the X.25 call. If this parameter is set to 0, the call is never be cleared. **■Note** Configure idle time on one or both sides of the link. If configured for both sides, the side with the shorter idle timer expires first and clear the X.25 call.

Verify Connection Timer Parameter

Range:	0 to 65534 seconds
Default:	0 seconds
Description:	Specifies how long the station waits after the link has been suspended, before verifying that the connection to the remote station is still active.

Unsuspend Wait Timer

Range:	0 to 65534 seconds
Default:	180 second
Description:	Specifies how long the station waits in LINK_UNSUSPENDING state after receiving a call request before clearing the link. If 0 is entered, the station waits in LINK UNSUSPENDED state forever.

■Note

Configure these parameters to implement Data/Connection Protection for SDLC traffic on this station.

*Protection Level

Range:	NONE, CP_ONLY, FULL_DCP
Default:	NONE
Description:	Specify the level of protection for SDLC traffic on this port. The actual level is negotiated downward to match the level at the other end. • NONE: Data/Connection Protection is disabled. • CP_ONLY: Only Connection Protection is enabled. • FULL_DCP: Data Protection and Connection Protection are enabled. **■Note** Set the Protection Level to “NONE” for SDLC traffic going over a Permanent Virtual Circuit (PVC).

Reconnection Timeout

Range:	1 to 128
Default:	2
Description:	Specify the number of seconds that DCP on the originating side waits between reconnection attempts. This parameter is used for DCP on SDLC traffic on this SDLC station.

Reconnection Tries Limit

Range:	0 to 127
Default:	4
Description:	Specify the number of times that DCP on the originating side attempts to reconnect before clearing the call. When set to 0 (zero), there is no attempt to reconnect. This parameter is used for DCP on SDLC traffic on this station.

SDLC Configuration Example

Example

Figure 16 shows the critical configuration parameters needed to implement SDLC in a HPAD/TPAD application over Frame Relay. The same application can be used for an X.25 application with a few adjustments. Figure 16 shows two Vanguard product nodes connected over a Frame Relay network. Port 1 of each node is used to make the connection from each node to the Frame Relay network. Both nodes use port 2 to connect to the SDLC devices. A Switched Virtual Circuit (SVC) autocall will be made from Node 200 to Node 100.

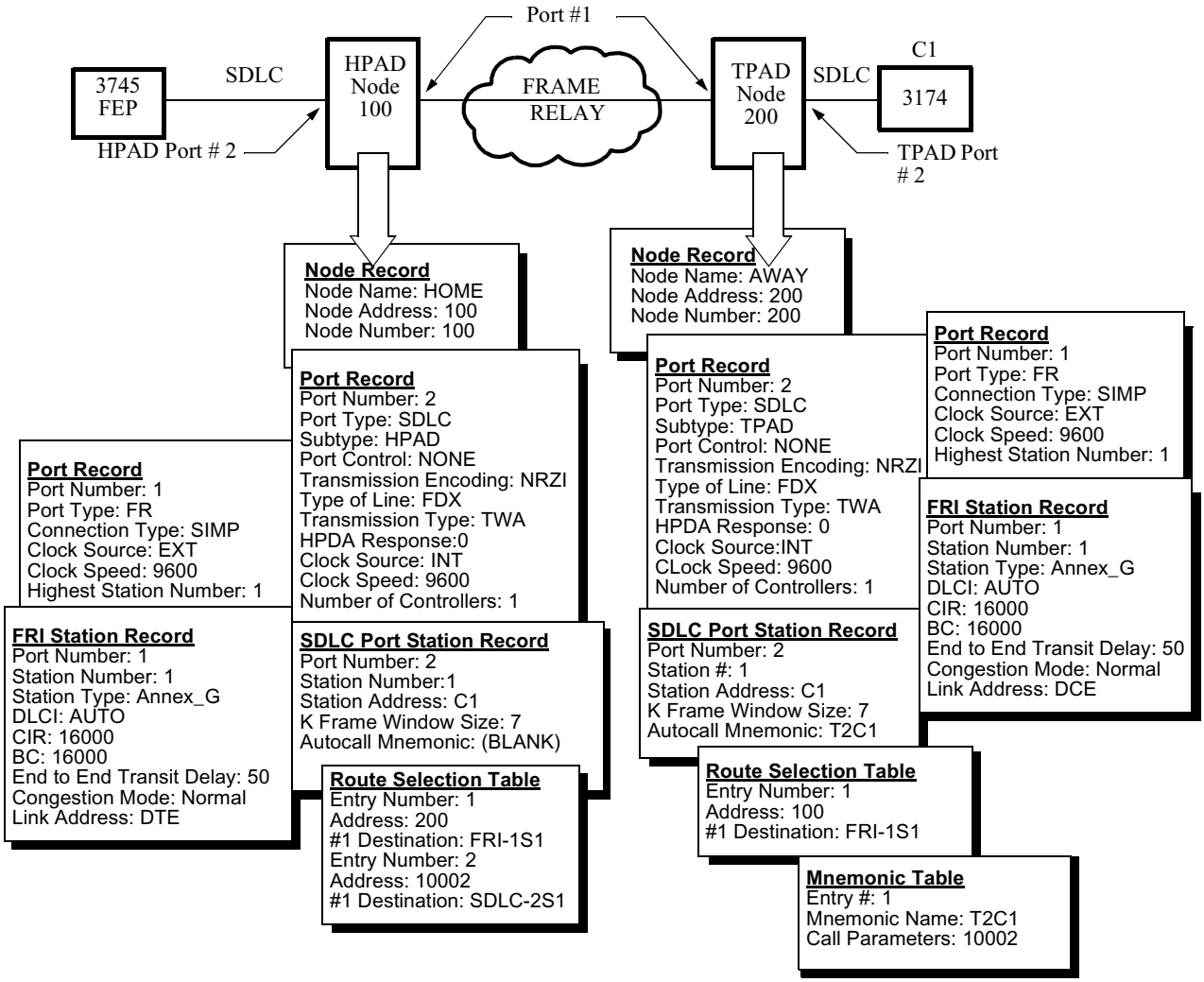

Figure 16. Example of SDLC HPAD/TPAD Application

SDLC Statistics

Introduction

This section describes statistics generated by the SDLC option.

You can use this information to monitor the operation of a Vanguard passing SDLC data traffic.

List of Statistics

These statistics are available:

- Detailed SDLC Port Statistics
- Detailed SDLC Link Statistics
- Detailed SDLC Station Statistics
- Call Summary Statistics
- PVC Connection Summary Report
- Group Poll Statistics

How to Display SDLC Statistics

Follow these steps to display SDLC option statistics:

Step	*Action*	*Result*
1	Select **Status/Statistics** from the CTP Main menu.	A menu of statistics appears.
2	Choose one of the following: • Detailed SDLC Port Statistics • Detailed SDLC Link Statistics • Detailed SDLC Station Statistics • Call Summary Statistics • PVC Connection Summary Report • Group Poll Statistics	The Port Number: prompt appears.
3	At the prompt, enter the number of the selected port.	A statistics screens appears. Refer to the following sections for sample statistics screens.

Detailed SDLC Port Statistics

Overview

Detailed Port Statistics provide status reports about various operations of an SDLC port.

Screen 1 of Detailed SDLC Port Statistics

Figure 17 shows screen 1 of the Detailed SDLC Port Statistics report.

```
Node:           Address:               Date:                Time:
Detailed SDLC Station Statistics: Port 9                    Page 1 of 2

Port Number: 9     Port Type:   SDLC       Subtype: TPAD
Port Status: Up    Port Speed:  71420


Physical Summary:
Overrun Errors: 0  Underrun Errors: 0      CRC Errors: 0
Non-Octet Aligned: 0     Frame Length Err: 0        Unknown DLCI Err: 0
Last Unknown DLCI: 0

Data Summary:
                   IN        OUT                        IN           OUT
     Characters:   219034    111249   Characters/sec:   0            0
         Frames:   1497      957          Frames/sec:   0            0

EIA Summary:

                                     INPUT              OUTPUT
State: Connected (SIMPLE)      DTR  RTS  MB  P14    DSR  DCD  RI  CTS
                                H    H   L   H      H    H   L   H
```

Figure 17. Screen 1 of Detailed SDLC Port Statistics

Screen 2 of the Detailed SDLC Port Statistics Report

Figure 18 shows screen 2 of the Detailed SDLC Port Statistics report.

```
Node:           Address:              Date:                Time:
Detailed SDLC Station Statistics: Port 9                    Page 2 of 2



Control Frame Summary:
                          IN      OUT                      IN   OUT
                     RR:  366852  366779            REJ:   0    0
                    RNR:  0       0                DISC:   0    0
                   SNRM:  0       0                  RD:   0    0
                     UA:  0       0                FRMR:   0    0
                     DM:  0       877                UP:   0    0
                    XID:  0       755              TEST:   0    0






Press any key to continue (ESC to exit)...
```

Figure 18. Detailed SDLC Port Statistics - Screen 2

Screen Terms

This table describes the parameters shown in Figures 17 and 18:

Term	Description
Port Number:	Specifies a specific port (physical port number) in the node.
Port Type:	Indicates the type of access protocol for this port. The example shows SDLC, indicating that this port is accessed by SDLC and HDLC protocols.
Subtype:	Indicates either a TPAD, HPAD, or station.
Port Status:	Specifies the current port status. Up: At least one station is responding to polls. Down: None of the stations are responding to polls. Disabled: The port is disabled by the user.
Port Speed:	The measured port speed in bits per second.
Physical Summary:	• Overrun Errors: Total number of overrun errors counted by the I/O driver. Overrun errors occur when received data is lost because it cannot be processed by the CPU. • Underrun Errors: Total number of underrun errors counted by the I/O driver. Underrun errors occur when the transmission of a frame cannot be completed because of momentary CPU overload. • CRC Errors: Indicates the number of errors detected by Cyclic Redundancy Check (CRC) since last node boot or reset of statistics. Indicates that a frame received contains one or more corrupted bits. • Non-Octet Aligned: Indicates an invalid frame that is not divisible by eight. • Frame Length Errors: Indicates the number of frames received with length less than five characters. • Unknown DLCI Err: Indicates the number of frames received with DLCI for which no station is configured. • Last Unknown DLCI: Indicates the last unknown DLCI received in a frame.
Data Summary IN/OUT:	Characters: Total number of characters transmitted or received until now, not including all SDLC header characters. Frames: Total number of SDLC frames transmitted or received until now. Characters/sec: The average number of characters transmitted or received per second during the previous minute. Frames/sec: The average number of frames transmitted or received per second during the previous minute.
EIA Summary:	State: Indicates SIMPLE mode connection; no control signals are required.
Control Frame Summary IN/OUT:	Indicates the total number of each type of frame transmitted or received until the present time.

Detailed SDLC Link Statistics

Overview

Detailed Link Statistics show statistics for communication links.

Example of Detailed Link Statistics report

Figure 19 shows the Detailed Link Statistics report.

```
Node:           Address:               Date:                 Time:
Detailed Link Statistics                                      Page 1 of 1

          Type                    State     CRC   Link  Dataframes  Utilization
entity  subtype  state  speed  date/time  errors  down    in/out       in/out
======  =======  ====== ===== ========== ====== ===== ========== ============
p9      sdlc     down     0   17-SEP-1992   0      0      0             0%
        hpad                 14:20:21                    0             0%
p9s5    sdlc     down                                0      0             0%
        station                                             0             0%
p9s6    sdlc     down                                0      0             0%
        station                                             0             0%
p10     sdlc     up    192200 17-SEP-1992          0      17053         0%
        tpad                                                8810          1%
p10s5   sdlc     up                                  0      13184         0%
        station                                             6236          0%
p10s6   sdlc     up                                  0      3869          0%
        station                                             2574




Press any key to continue (ESC to exit)...
```

Figure 19. Detailed Link Statistics

Screen Terms

This table describes the screen attributes for the Detailed Link Statistics report, as shown in Figure 19:

Term	Description
Entity:	Refers to the physical port and station number in the following format: p<port#>s<station#> where p = port and s = station.
Type/Subtype:	Indicates SDLC port type and station type, which can be either TPAD, HPAD, or station.
State:	Specifies the current port status. Up: The station is responding to polls. Down: The station is not responding to polls. Disabled: The port is disabled by the user.
Speed:	Measured port speed in bits per second.
Date/Time:	The date and time when the link entered the current state.
CRC Errors:	Total number of CRC errors detected until now.
Link Down:	Total number of times the link has made a transition from the UP state to the DOWN state.
Data Frames IN/OUT:	Total number of data frames transmitted or received up to this time.
*Utilization IN/OUT:	Indicates a percentage of the link resources currently in use in both the IN (from the line to the port) and OUT (from the port to the line) directions. *Formula to calculate: $\frac{\text{(Number of bytes per second x 100)}}{\left(\frac{\text{speed}}{8}\right)}$

Detailed SDLC Station Statistics

Overview

Detailed SDLC Station Statistics show statistics for SDLC Stations.

Detailed SDLC Station Statistics - Page 1 of 2

Figure 20 shows page 1 of the Detailed SDLC Station Statistics report.

```
Node:           Address:               Date:                 Time:
Detailed SDLC Station Statistics: Port 9  Station 1           Page 1 of 2

Port Number: 9     Port Type:   SDLC       Subtype: TPAD
Station Number: 1  Station Address: C1     Station Status: Down
QLLC State: INOPERATIVE

Data Summary:
                   IN        OUT                        IN     OUT
     Characters:  131331    28495    Characters/sec:  0      0
         Frames:  0         0            Frames/sec:  0      0
  Number of Packets Queued: 0

Control Frame Summary:
                   IN        OUT                        IN     OUT
             RR:  125332    125327              REJ:  0      0
            RNR:  0         0                  DISC:  0      0
           SNRM:  0         0                    RD:  0      0
             UA:  0         0                  FRMR:  0      0
             DM:  0         877                  UP:  0      0
            XID:  0         755                 TEST:  0      0


Press any key to continue (ESC to exit)...
```

Figure 20. Detailed SDLC Station Statistics - Screen 1

Detailed SDLC Station Statistics - Page 2 of 2

Figure 21 shows page 2 of the Detailed SDLC Station Statistics.

```
Node:           Address:               Date:                 Time:
Detailed SDLC Station Statistics: Port 9  Station 1           Page 2 of 2

QLLC Summary:
                   IN        OUT                        IN     OUT
             QSM:  0         0                    QRR:  0      0
             QUA:  0         0                    QDC:  0      0
             QRD:  0         0                    QDM:  0      0
           QFRMR:  0         0                  QTEST:  0      0
             XID:  0         0


Press any key to continue (ESC to exit)...
```

Figure 21. Detailed SDLC Station Statistics - Screen 2

Screen Terms

This table describes the screen terms for the Detailed SDLC Statistics screens, as shown in Figures 20 and 21:

Term	Description
Port Number:	Refers to the physical port number.
Port Type:	Always displays SDLC.
Subtype:	Indicates SDLC station type, which can be either TPAD or HPAD.
Station Number:	Station reference number.
Station Address:	Configured Station address.
Station Status:	Indicates the current operational status of the station: • UP: Station is receiving (HPAD) and responding (TPAD) to polls. • DOWN: Station is not receiving (HPAD) and responding (TPAD) to polls. • Disabled: Station is disabled by the user. • Active: Station is responding to polls, but SNRM/UA exchange has not occurred and the Station cannot pass data.
QLLC State:	Indicates the status of the QLLC layer: • INOPERATIVE: No connection exists with the station. • LINK_CLOSED: X.25 call is connected, but there has been no successful QXID exchange and data cannot pass. • LINK_OPENING: The X.25 call is connected and there has been a successful QXID exchange. However, there has been no QUA or QDM response to a QSM command. • LINK_OPENED: X.25 call is connected and data is passing. • LINK_CLOSING: Disconnect in process. Station may come back up after an SVC clear or PVC reset. If it does not, boot the station to clear it. • LINK_RECOVERY: X.25 call is connected and the station has sent a QFRMR packet over the link. Station may come back up after an SVC clear or a PVC reset. If it does not recover, boot the station to clear it. **■ Note** This value is not supported by the 6500*PLUS*

Term	Description *(continued)*
Data Summary IN/OUT:	• Characters: Total number of characters transmitted or received until now, not including frame characters. • Frames: Total number of frames transmitted or received. • Number of Packets Queued: Total number of packets queued at the SDLC protocol layer by the transmitter. • Characters/sec: The average number of characters transmitted or received per second during the previous minute. • Frames/sec: The average number of frames transmitted or received per second during the previous minute.
Control Frame Summary IN/OUT:	Total number of frames transmitted or received until now, listed by frame types.
QLLC Summary IN/OUT:	Total number of QLLC packets transmitted or received until now, listed by packet type.

Call Summary Statistics

Overview

Call Summary Stats provide detailed information about all the current calls.

Example of the Call Summary Statistics Report

Figure 22 shows the Call Summary Statistics report. You are prompted to specify either an SVC or PVC summary.

```
 Node:              Address:              Date:          Time:
Detailed Call Summary                                    Page:  1 of  1
                                          Facilities
Calling Channel       Called Channel       R F N C        Connection Time
-----------------------------------------------------------------------------
PAD-6                 Control Port          0 0 0 0      20-SEP-1992  5:36:47
LCON-1                X25-3(5)              0 0 0 0      20-SEP-1993 5:37:00


Press any key to continue ( ESC to exit ) ...
```

Figure 22. Call Summary Statistics Report

When you select SVC Call Summary, a detailed Call Summary screen appears similar to that shown in Figure 22. Selecting PVC Connection Summary produces a detailed Link Connection screen similar to Figure 23.

Screen Terms

This table describes terms for the Call Summary report, as shown in Figure 22:

Term	*Description*
Calling Channel:	Channel that initiated the call.
Called Channel:	Channel that received the call.
Facilities:	These are the facilities, excluding packet/window negotiation, used (1) or not used (0) for the call: • R: Reverse Charge • F: Fast Select • N: Network User Identification • C: Closed User Group
Connection Time:	The time that the connection was made.

PVC Connection Summary Report

Overview

Figure 23 shows the PVC Summary report.

```
 Node:              Address:               Date:            Time:
 Detailed PVC Connection Summary                             Page:  1 of  1

Source Channel         Destination Channel    Connection Time
-------------------------------------------------------------------------------
X25-1(3)               PAD-3                  24-DEC-1992 20:38:57
*PAD-4                 PAD-5                  24-DEC-1992 20:38:57



Press any key to continue ( ESC to exit ) ...
```

Figure 23. PVC Connection Summary Report

Screen Terms

This table lists terms for the PVC Connection Summary report, as shown in Figure 23:

Term	*Description*
Source Channel:	Channel's source.
Destination Channel:	Channel's destination.
Connection Time:	The time that the connection was made.

Group Poll Statistics

Introduction

The Group Poll statistics are found on page 2 of the Detailed Port Stats screen for SDLC HPAD ports (see Figures 24 and 25). The UP (unnumbered poll) frame is the frame that is sent by the host to Group Poll stations. Each UP frame that is received on the SDLC HPAD port is accounted for and incremented in the UP (IN) field of the Detailed Port Stats screen. Conversely, an UP response frame is sent by the SDLC HPAD in response to an UP frame from the host when none of the stations in the polled group have data to send. This UP (unnumbered poll) response frame is counted in the UP (OUT) field of the Detailed Port Stats screen for the SDLC HPAD port.

Group Poll in Detailed Port Statistics - Screen 1

Figure 24 shows Screen 1 of Detailed Port Statistics.

```
Node:         Address:                  Date:                 Time:
Detailed SDLC Station Statistics: Port 2 Station 1           Page 1 of 2

Port Number: 2Port Type: SDLC          Subtype: HPAD
Station Number: 1Station Address: 01   Station Status: Down
QLLC State: INOPERATIVE

Data Summary:

                   IN        OUT                        IN           OUT
     Characters:   0         0        Characters/sec:   0            0
         Frames:   0         0            Frames/sec:   0            0
Numbers of Packets Queued:0   0

Control Frame Summary:

                   IN            OUT                      IN           OUT
             RR:   0             0                REJ:    0            0
            RNR:   0             0               DISC:    0            0
           SNRM:   0             0                 RD:    0            0
             UA:   0             0               FRMR:    0            0
             DM:   0             0                 UP:    0            0
            XID:   0             0               TEST:    0            0


Press any key to continue (ESC to exit)...
```

Figure 24. Group Poll in Detailed Port Statistics - Screen 1

Group Poll in Detailed Port Statistics - Screen 2

Figure 25 shows the statistics that appear on the Detailed Port Statistics screen 2.

```
Node:        Address:                Date:                Time:
Detailed SDLC Port Statistics: Port  4                    Page 2 of 2


Control Frame Summary:

                IN           OUT                  IN           OUT
          RR:   0            0            REJ:    0            0
         RNR:   0            0           DISC:    0            0
        SNRM:   0            0             RD:    0            0
          UA:   0            0           FRMR:    0            0
          DM:   0            0             UP:    0            0
         XID:   0            0           TEST:    0            0




Press any key to continue (ESC to exit)...
```

Figure 25. Group Poll in Detailed Port Statistics - Screen 2

Description

The Detailed Station Statistics for SDLC stations show the number of unnumbered poll (UP) frames that have been sent and received on an SDLC HPAD port that is configured with the Group Poll option. The UP stats are updated for the station that is acting as the gateway for a specific poll group. All other stations in the poll group will not have this stat updated.

Note

The UP frames (IN) are frames that are sent into the Vanguard HPAD port.
The UP frames (OUT) are frames that are sent out of the Vanguard HPAD port.

Line Activation/Deactivation

Introduction

This section provides a conceptual illustration of line activation/deactivation for SDLC operations.

HPAD Places SVC Call - PU2.1/XID3 Support

Figure 26 shows an HPAD placing an SVC call to the TPAD.

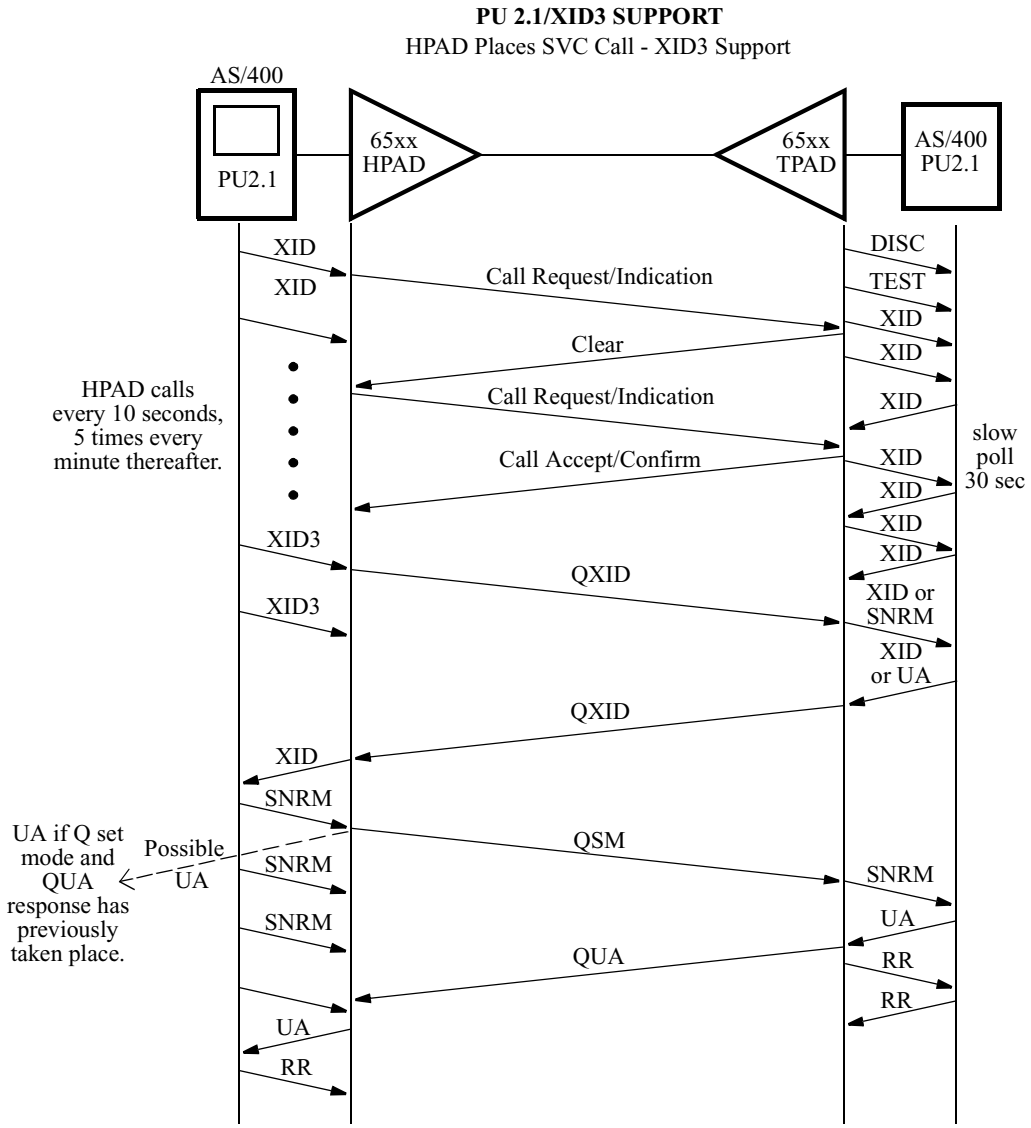

Figure 26. Example of HPAD Making SVC Call to TPAD

TPAD Places SVC Call - PU2.1/XID3 Support

Figure 27 shows the TPAD placing the SVC call to the HPAD.

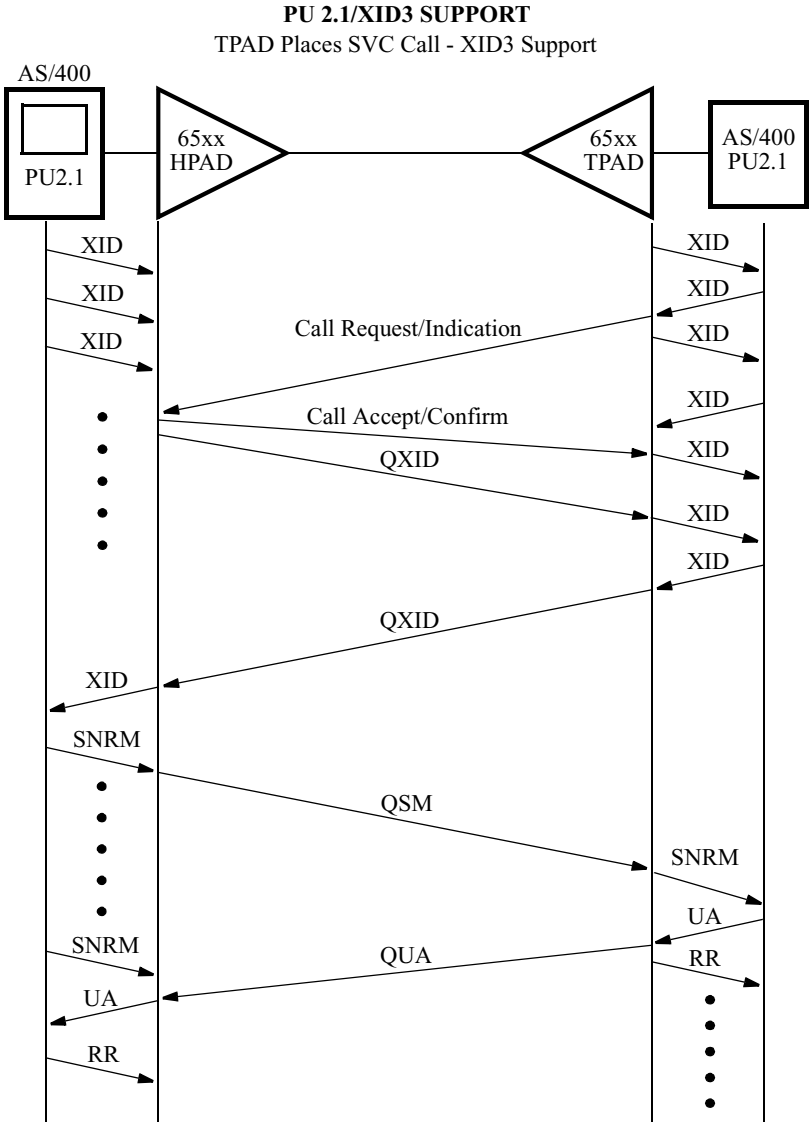

Figure 27. Example of TPAD Making SVC Call to HPAD

HPAD Places SVC Call - No XID3

Figure 28 shows the HPAD placing the SVC call to the TPAD without XID3 support.

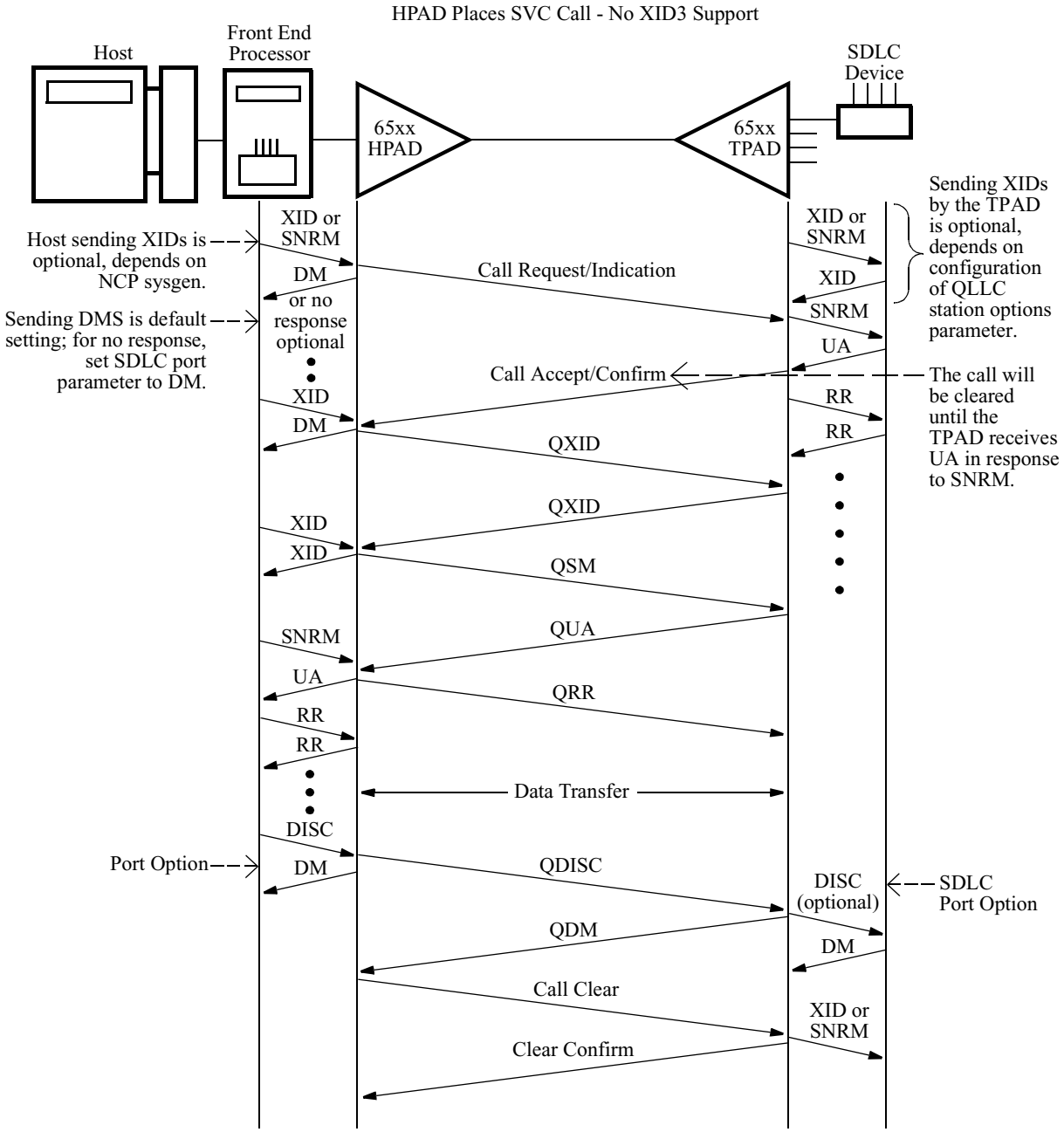

Figure 28. Example of HPAD Making SVC Call to TPAD without XID3

TPAD Places SVC Call - No XID3

Figure 29 shows the TPAD placing an SVC Call without XID3 support.

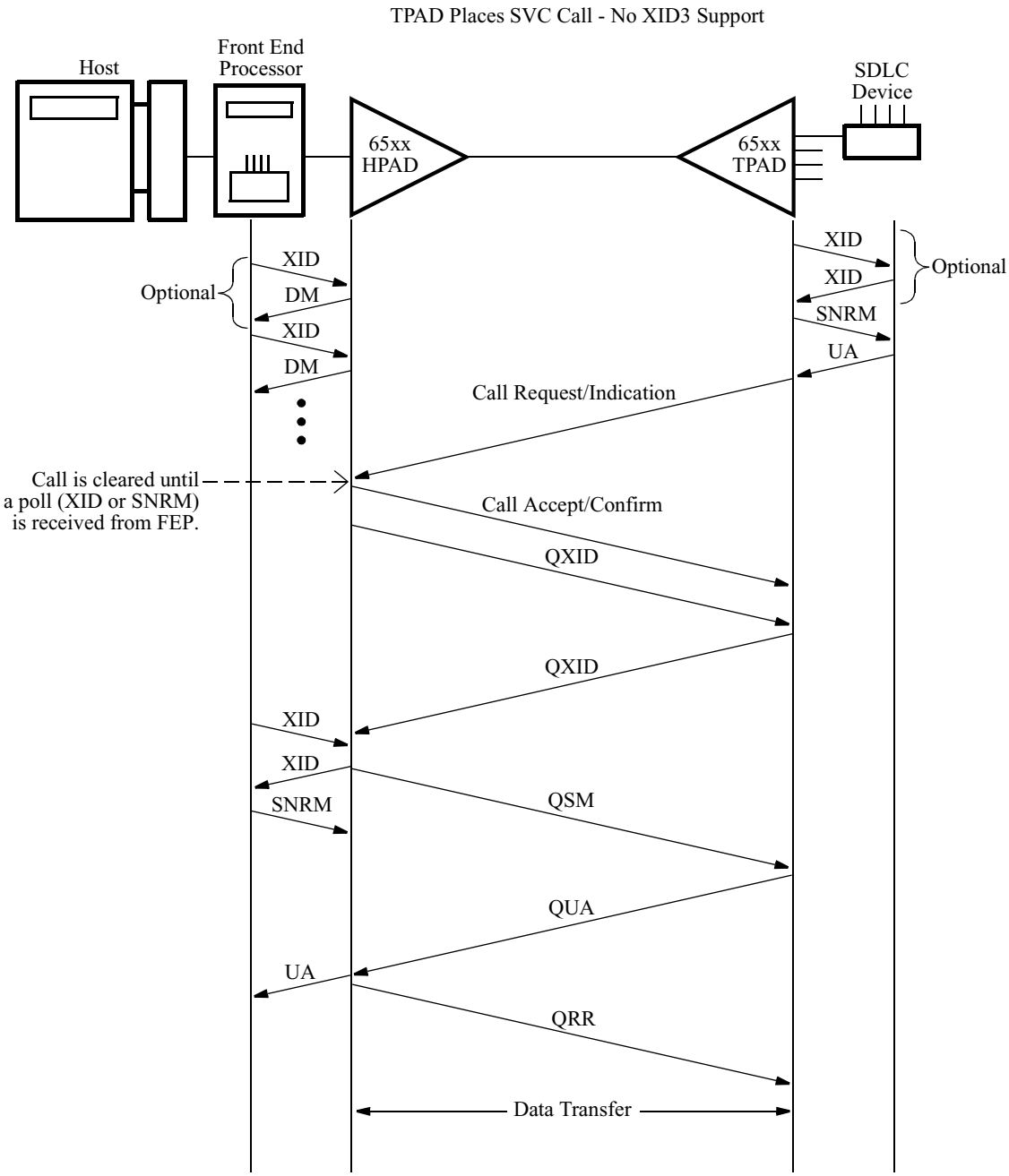

Figure 29. Example of TPAD Making SVC Call without XID3

NPSI Places SVC Call - No XID3

Figure 30 shows NPSI placing an SVC call without XID3 support.

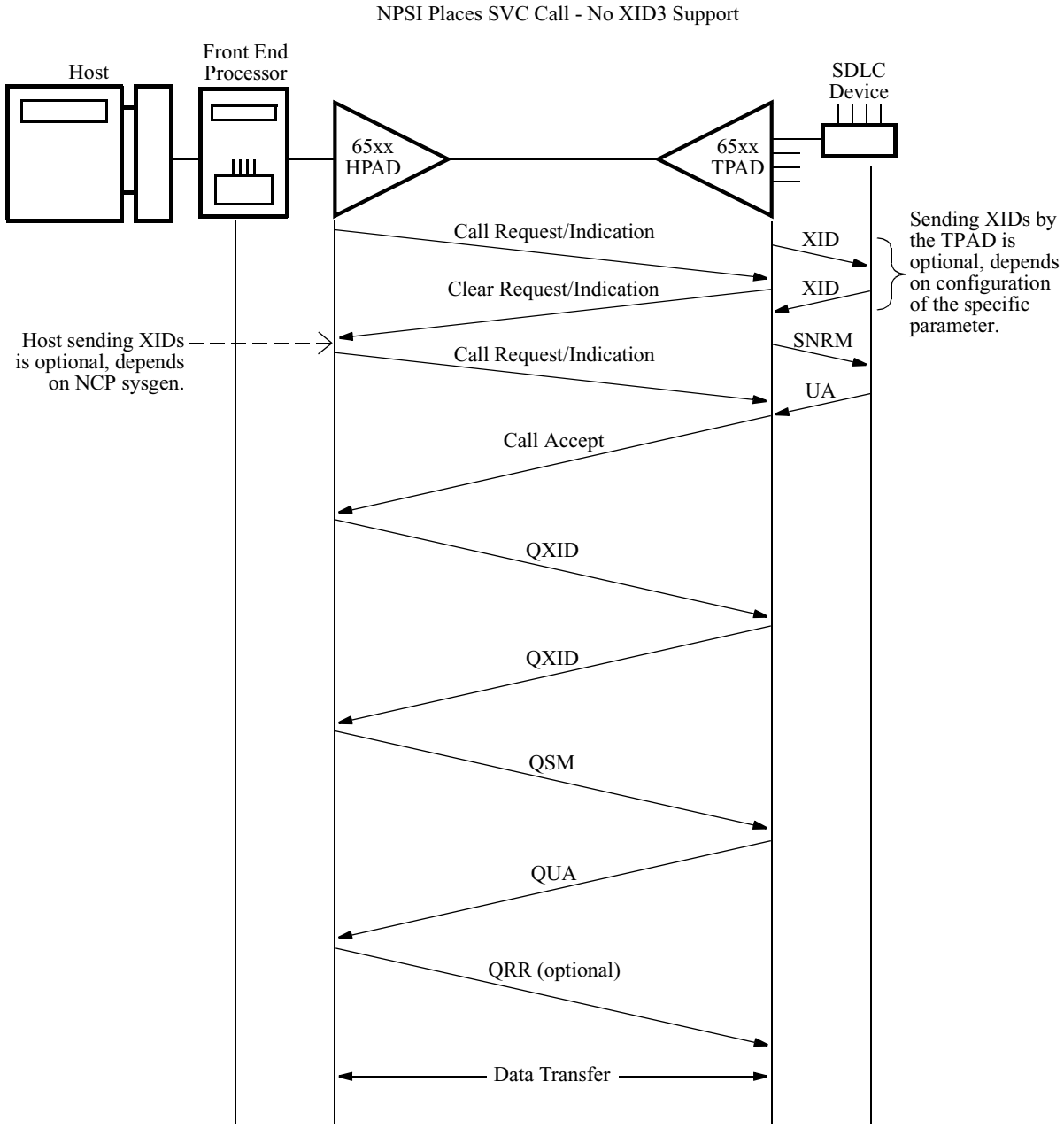

Figure 30. Example of NPSI Making SVC Call without XID3

SDLC-to-LLC2 Conversion

Introduction

The SDLC option lets you convert SDLC data traffic to LLC or QLLC data traffic so you can pass SDLC frames from X.25 and Frame Relay networks, across your local LANs and into IBM Front End Processors.

SDLC-to-LLC LAN Conversion for X.25

SDLC-to-LLC2 LAN Conversion (also referred to as SLAC) converts serial SNA traffic, such as TPAD-SDLC or QLLC, into LLC2 Token Ring, as shown in Figure 31, or Ethernet traffic for X.25 networks.

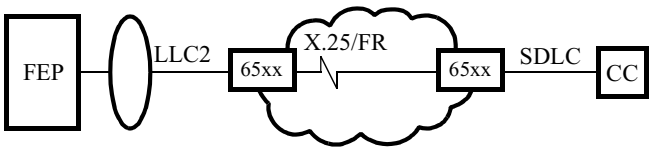

Figure 31. Example of SDLC-to-LLC2 LAN Conversion

SDLC-to-SLC-to-LLC LAN Conversion for Frame Relay

SDLC-to-LLC with RFC 1490 Encapsulation (also referred to as LSC) enables your Vanguard node to convert SDLC data traffic to LLC data traffic on a Frame Relay network.

LSC takes SDLC/QLLC serial data from a remote site, converts it to LLC format, encapsulates the data in LSC or RFC 1490, and transmits it over Frame Relay, as shown in Figure 32.

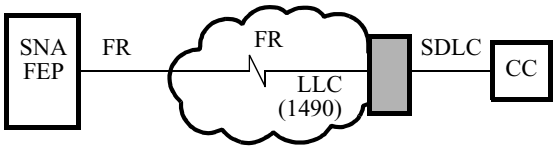

Figure 32. Example of RFC 1490 Conversion for Frame Relay

Ethernet and Token Ring Support

SDLC-to-LLC2 Conversion Ethernet interface support lets you convert SNA traffic, such as SDLC, 1490/ Token Ring LLC2 into Ethernet LLC2 on a LAN. SDLC-to-LLC2 Conversion Token Ring interface support lets you convert SNA traffic, such as SDLC, 1490/Ethernet LLC2 into Token Ring LLC2 on a LAN.

Since the Vanguard 6520 supports up to two Ethernet or two Token Ring interfaces, the SDLC-to-LLC2 Conversion feature now supports a second Ethernet and a second Token Ring LAN, so you can perform conversion operations on two Ethernet LANs per node (Figure 33) or on two Token Ring LANs per node (Figure 34).

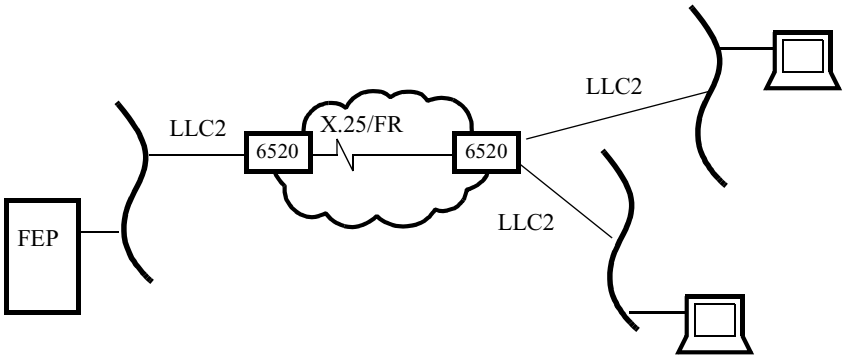

Figure 33. Example of Conversion for Two Ethernet LANs

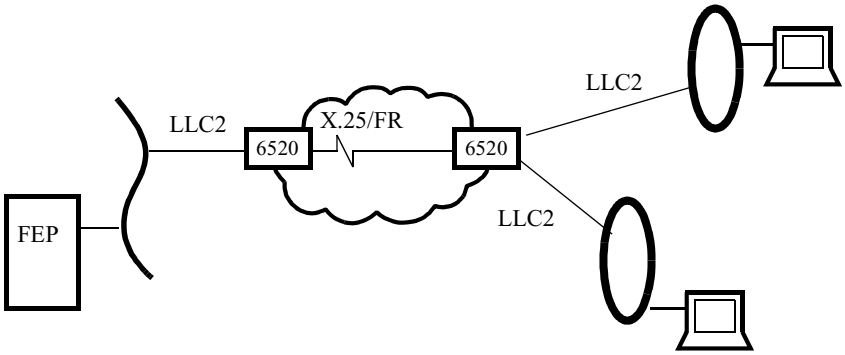

Figure 34. Example of Conversion for Two Token Ring LANs

This means you can configure two Ethernet LAN or two Token Ring LAN conversion operations per node on the Vanguard 6520.

Support for Up to 250 Conversion Stations per Ethernet Port

Each Ethernet port now supports up to 250 SDLC-to-LLC2 Conversion stations. Previously, you could only configure 64 conversion stations per Ethernet port. When the node is booted up with two Ethernet ports configured for conversion operations, CTP monitoring screens for Configure, List, Examine, and Statistics will display details on both Ethernet ports.

By increasing conversion station support to 250 and adding support for dual Ethernet LANs on the Vanguard 6520, you can now configure up to 500 conversion stations per node.

Configuring the Route Selection Table for Dual Ethernet Conversion

When you perform conversion on both ports in a dual Ethernet implementation, enter destination strings in these formats:

String	Description
LSC-ETH13S1	routes calls to the Ethernet LLC Conversion station 1 on Ethernet port 13
LSC-ETH19S125	routes calls to Ethernet LLC Conversion station 125 on Ethernet port 19
LSC-ETP19G2	routes calls to Primary Hunt Group number 2 on Ethernet port 19
LSC-ETS13G1	routes calls to secondary Hunt Group number 1 on Ethernet port 13

Reverse Ethernet Conversion

You can perform reverse conversion by passing LLC frames from an Ethernet LAN into the Front End Processor (FEP) as Frame Relay RFC 1490, SDLC, or Token Ring LLC. Refer to the “Reverse LLC2 Conversion” section on page 89 for more details on this feature.

Advantages of SDLC-to-LLC LAN Conversion

Because the SDLC-to-LLC2 LAN Conversion implementation occurs at the host site instead of the branch site, it provides three distinct advantages over other types of conversion software:

- Less WAN overhead.
- More predictable response times using call-based routing with traffic priority.
- Easy migration from serial-based SDLC format to LLC2 format.

Why is RFC 1490 Conversion Needed?

IBM recently introduced NCP Version 7 Release 1 (NCP 7.1) and now NCP 7.2 and 7.3 software to run on the 3745 front end processor (FEP), which can terminate LLC traffic through a serial Frame Relay port. LSC with RFC 1490 provides you with another option to terminate your SNA traffic without an Ethernet or Token Ring.

Advantages of RFC 1490

Conversion with RFC 1490 advantages include:

- Requires no central site equipment; termination is direct from the carrier.
- Allows a greater number of SNA devices per port compared to SDLC.
- Allows termination of FEP to FEP (front end processor) links as well as FEP to Cluster Controller (CC) links on the same physical port.
- Gives Switched Major node appearance, reducing network configuration requirements of FEP.

Vanguard Product Support

All Vanguard Products support SDLC-to-LLC Conversion and RFC 1490 encapsulation of SDLC data into Frame Relay using Conversion.

Each Token Ring or Ethernet interface can convert up to 64 SNA devices.

Limitations

Limitations for LLC2 Conversion include:

- 59 conversion sessions per host interface
- 64 conversion sessions per on Vanguard 100, Vanguard 200, and 6500*PLUS*
- 256 conversion sessions per Vanguard 6520, 6560, 6400, and Vanguard 300/305. If you configure more than 64 session, increase local memory.

Interoperability

The SDLC-to-LLC Conversion feature is downward compatible with all ONS and Vanguard Applications Ware releases.

SNMP Management

All SDLC-to-LLC Conversion events can be forwarded to network management systems as SNMP traps. SDLC-to-LLC station parameters and statistics can be viewed with the network management system.

Canonical Format

Before you configure the MAC address, make sure you set the display format to Canonical for Ethernet and Non-Canonical for Token Ring from the LAN Control Menu on Vanguard products running Conversion. If you do not configure the node for the correct display, the end station does not recognize the configured MAC addresses.

How SDLC-to-LLC2 LAN Conversion Works

Introduction

This section describes how SDLC-to-LLC2 Conversion works.

How It Works

As shown in Figure 35, a Vanguard TPAD receives SDLC frames at the remote site, sends them across the network to the host site where SDLC-to-LLC2 Conversion operating in the HPAD Vanguard then converts the frames to LLC2 frames. Then, SDLC-to-LLC2 Conversion places the converted frames on the LAN for the SNA FEP. Figure 36 shows the same solution for an Ethernet LAN.

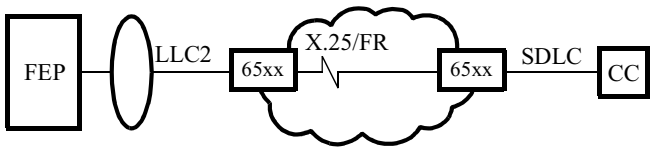

Figure 35. Example of How SDLC-to-LLC2 Conversion Works for Token RIng LAN

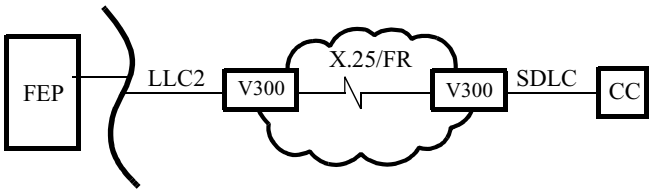

Figure 36. Example of How SDLC-to-LLC2 Conversion Works for Ethernet LAN

Benefits

SDLC-to-LLC2 Conversion minimizes packet overhead because frame size is reduced and no further encapsulation is required to send the frames across the network.

The X.25 header provides the data integrity required by SNA traffic. And since SDLC-to-LLC2 Conversion performs the actual conversion of the frames at the host site, the overhead of LAN-based traffic does not appear on the WAN.

Typical SDLC-to-LLC2 Conversion Applications

Introduction

Typical applications include:

- Remote SDLC serial conversion to local LLC2 Token Ring or Ethernet LAN
- Local SDLC-to-LLC2 Token Ring or Ethernet LAN
- Local and remote SDLC conversion for Frame Relay traffic

Remote SDLC-to-Local LLC LAN

Figure 37 shows how remote SDLC serial data is handled by SDLC-to-LLC2 Conversion for a Token Ring LAN. SDLC traffic passes through a Vanguard network before SDLC-to-LLC2 Conversion converts it to LLC format for use on a physical Token Ring (or Ethernet LAN).

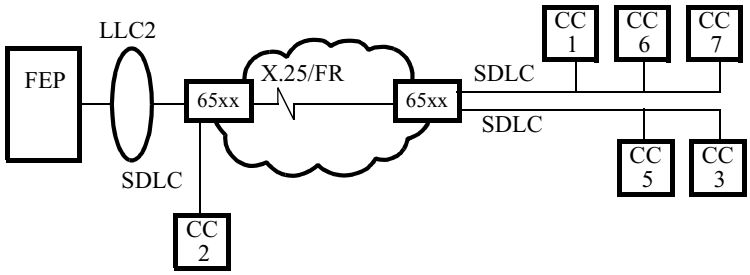

Figure 37. Remote SDLC Serial to Local LLC TR LAN

Local SDLC-to-LLC Token Ring LAN

Figure 38 shows a simple implementation of SDLC-to-LLC2 LAN Conversion. A single Vanguard node takes controllers connected to its SDLC/X.25 serial ports and gives them a Token Ring LLC appearance on the Token Ring port. This works the same way for Ethernet LANs.

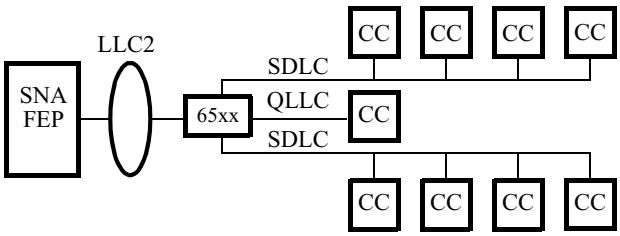

Figure 38. Local SDLC/QLLC to LLC Token Ring LAN

This application provides a single box solution that lets you direct SDLC cluster controller traffic into the FEP through a Token Ring port. This approach reduces FEP size and cost and increases configuration flexibility. In some cases, it may also eliminate the need for the FEP, allowing you to replace it with a gateway 3172, 3174, or a Token Ring bridged back to the central site FEP.

Configuring SDLC-to-LLC2 Conversion

Introduction

This section describes the tables and records you need to configure for typical SDLC-to-LLC2 Conversion applications for conversion of SDLC-to-LLC on a Token Ring or Ethernet LAN, or Frame Relay.

Configure These for SDLC-to-LLC2 LAN Conversion

Configure these tables and records to perform SDLC-to-LLC2 LAN Conversion:

For the HPAD node	*For the TPAD node*
Port Record	Port Record
LLC to SDLC Station Table	SDLC Port Stations Record
Route Selection Table	Route Selection Table
Mnemonic Table	

■Note

This assumes the node you are configuring is already configured for normal LAN/WAN operation. LAN parameters for the SDLC-to-LLC Conversion node are configurable through the SDLC-to-LLC Conversion Profile table. Normally, the default Profile table parameters are adequate for SDLC-to-LLC Conversion configuration.

Refer to the “Token Ring LAN Conversion Example” section on page 75 and the “Ethernet LAN Conversion Example” section on page 76 for more details.

Configure These for SDLC-to-LLC2 Conversion for Frame Relay

Configure these tables and records to perform SDLC-to-LLC2 Conversion for Frame Relay:

For the HPAD node...	*For the TPAD node...*
LLC to SDLC FR Station Table	Port record
Mnemonic Table	SDLC Port Stations Record
Route Selection Table	Route Selection Table
Port record	FRI Station Table

■Note

This assumes the node you are configuring is already configured for normal LAN/WAN operation.

Refer to the “Frame Relay Conversion Example” section on page 77 for more details.

Ethernet and Token Ring Examples

The following sections show examples of SDLC-to-LLC Conversion applications for Ethernet and Token Ring LANs and Frame Relay (see Figures 39, 40, and 41).

Note

The sample configurations provided in this option manual are intended to help you identify the parameters and values you need to configure in order to implement SDLC-to-LLC2 Conversion on your network. These examples show only the critical parameters you must configure to perform the SDLC-to-LLC2 Conversion operation. Parameter values shown in these examples apply only to the sample configurations. You must determine the parameter values required for your network.

Configuring Autolearn for LLC2 Conversion

Introduction

Autolearn for LLC2 Conversion lets Vanguard Conversion stations automatically learn the MAC addresses of remote physical units (PUs) attached over Ethernet or Token Ring LANs.

Configuring Autolearn for LLC2 Conversion

To allow the PU's MAC address to be automatically learned by the LLC-SDLC Conversion Station, set these parameters to the values shown:

Set this parameter...	*To this value:*
External MAC Address	00:00:00:00:00:00
Internal MAC Address	A unique MAC address with the format nn:nn:nn:nn:ss:ss. Refer to "Internal MAC Address" on page 100.
Internal SAP	04
External SAP	04
External PU Type	2 or 2.1
Initiate Test Frame	OFF
QLLC Station Address	01

Note

The Remote Vanguard Conversion station must make the call, so configure the Mnemonic table for each remote Conversion station.

See Figure 3 on page 9 for an example of Autolearn for LLC2.

Token Ring LAN Conversion Example

Introduction

This section shows an example of how to configure SDLC-to-LLC2 Conversion for a Token Ring LAN.

Example

Figure 39 shows a two node solution for converting SDLC data traffic to LLC2 for a LAN-attached IBM 3745 Front End Processor. The SDLC-to-LLC2 Conversion node on the HPAD side makes the autocall, but you can configure either side to initiate the autocall.

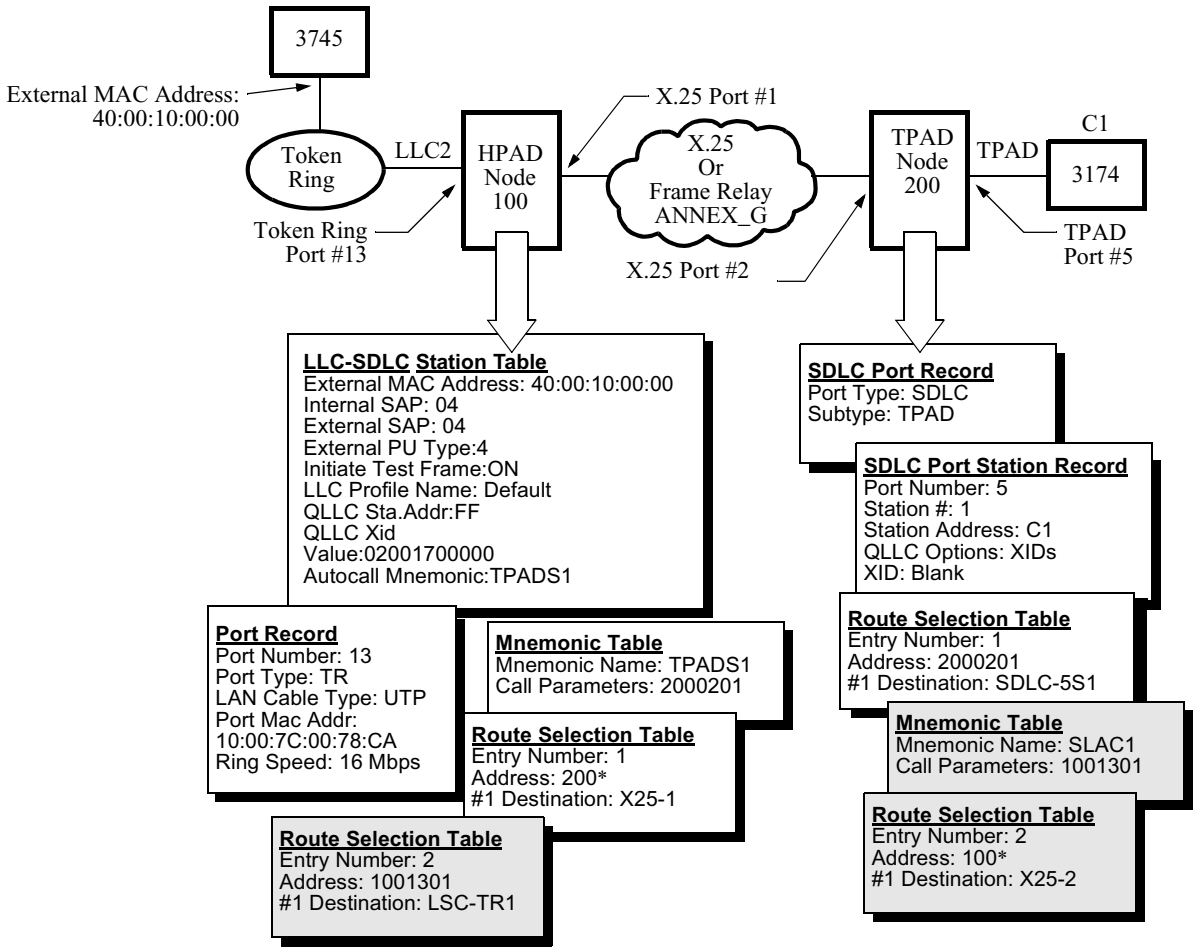

Note: ▭ Shaded parameters indicate TPAD initiated Autocall.

Figure 39. Two-Node Token Ring-based SDLC-to-LLC2 Conversion Configuration Example

Ethernet LAN Conversion Example

Introduction

This section shows an example of a SDLC-to-LLC2 Conversion application for an Ethernet LAN.

Example of Ethernet-Based Configuration for SLAC

Figure 40 shows a two-box solution for converting SDLC data traffic to LLC2 for an IBM 3174 Subsystem Control Unit (SCU) connected to an Ethernet LAN.

The SDLC-to-LLC2 Conversion node, which performs the SDLC-to-LLC2 conversion, is configured to make the autocall to the TPAD in this configuration. However, the TPAD can also be configured to make the autocall by configuring the Mnemonic table entry on the TPAD side.

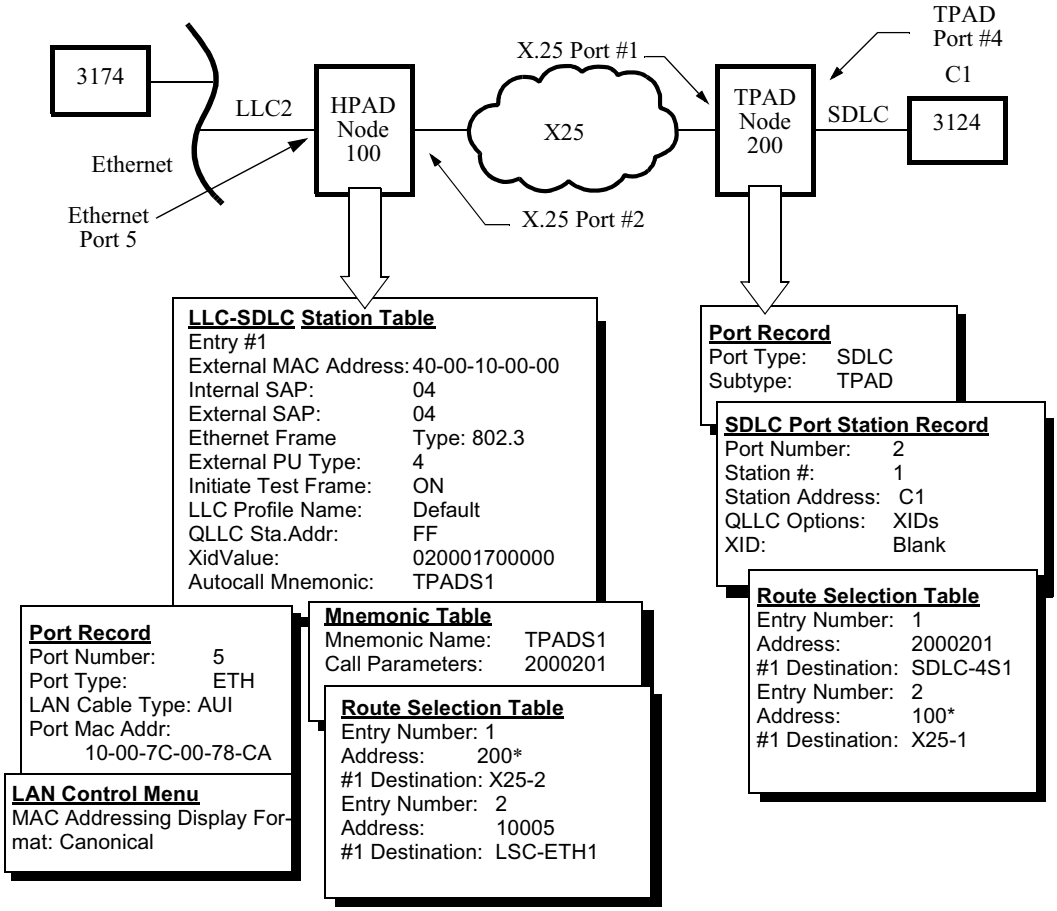

Figure 40. Vanguard Ethernet-Based LLC2 Conversion Configuration Example

Frame Relay Conversion Example

RFC 1490 LSC Single Box Configuration

Figure 41 shows the critical parameters you need to configure to implement SDLC-to-LLC2 Conversion for RFC 1490 encapsulation on a Frame Relay network. This example shows a single box solution using a Vanguard to convert SDLC traffic into RFC 1490 Frame Relay traffic, which is then passed across the WAN to a FEP. Both the HPAD and TPAD is configured in Node 200.

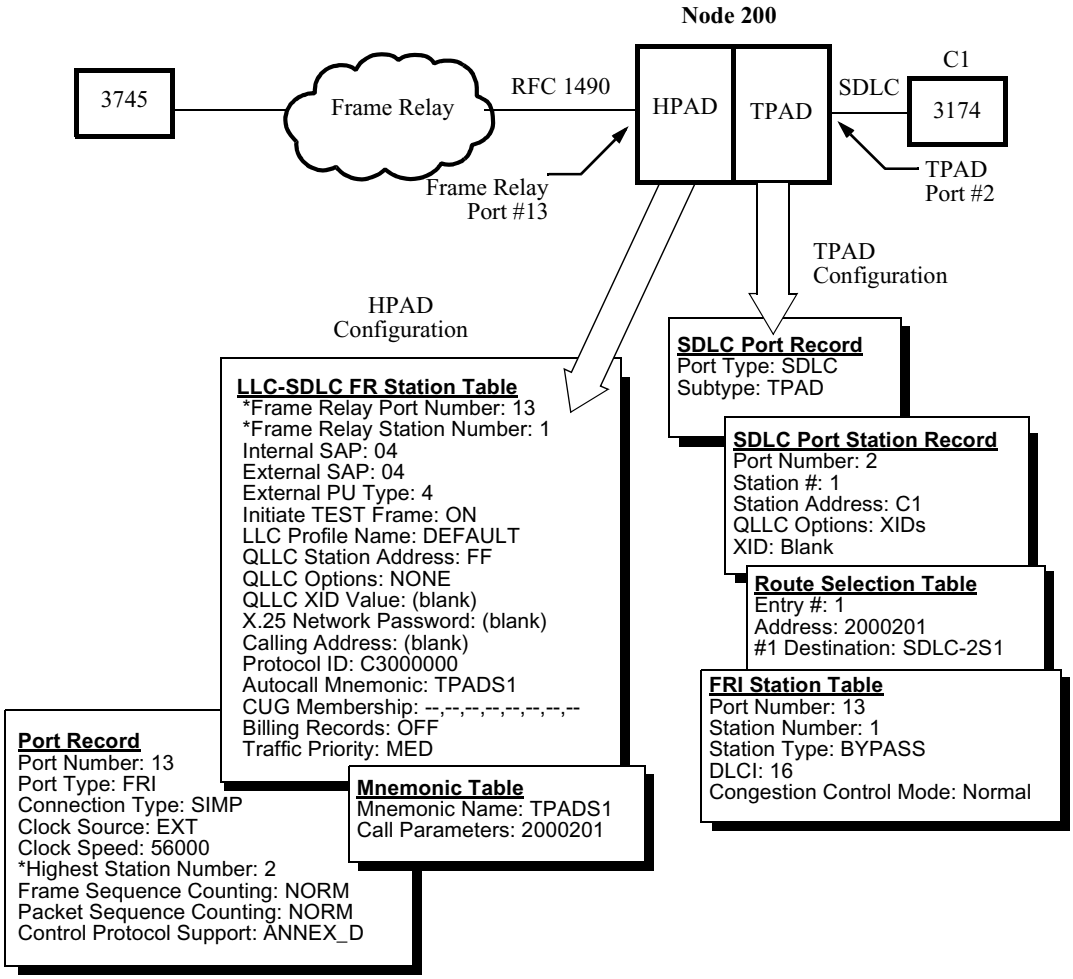

Figure 41. RFC 1490 Single-Box Frame Relay Example

Token Ring LAN Conversion with DCP Example

Introduction

This section shows an example of how to configure Data/Connection Protection on SDLC-to-LLC2 conversion for a Token Ring LAN.

Example

Figure 42 shows a two node solution for converting SDLC data traffic to LLC2 for an IBM 3745 Front End Processor attached to a Token Ring LAN. In the case where the primary link is broken, DCP is configured so that you will not lose the session during the re-route to the backup link. The TPAD initiates the autocall.

Note

If there is an intermediate node in the network, the X.25 parameter options must be set to INL+CAUSE. This parameter, which is located in the port configuration, must be enabled on the links and backup links for DCP to work properly.

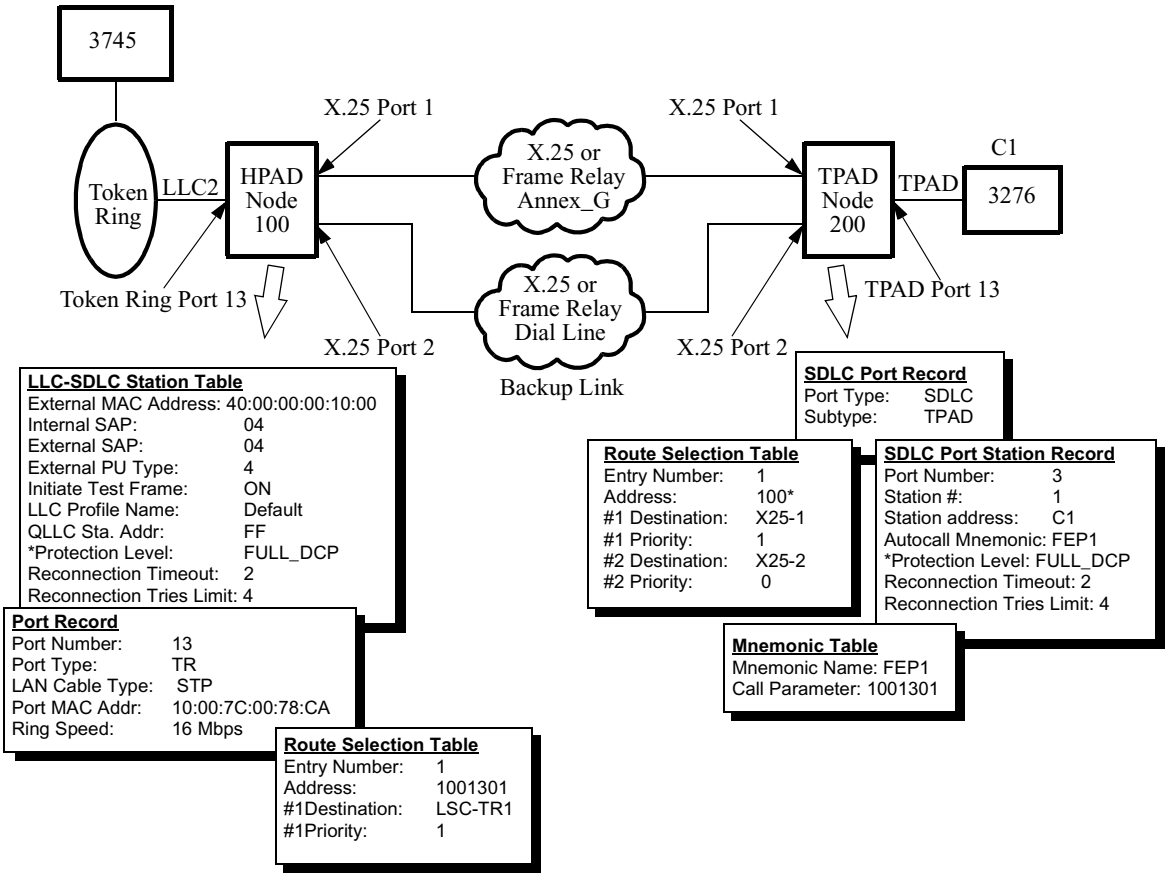

Figure 42. Two Node SDLC-to-LLC2 Conversion with DCP Example

BAN Frame Format Conversion Examples

Overview

The following examples show the critical parameters you need to set to perform BAN frame formatting of data traffic on your Frame Relay network. In this example, calls are made from the remote end of the network.The SDLC station calls the Conversion station.

SDLC TPAD Configuration for BAN

Figures 43, 44, and 45 show the critical parameters you need to configure to perform BAN frame formatting on SDLC data traffic in your network. This example shows SDLC traffic converted to BAN frame format at a remote Vanguard 6520. The BAN frames travel across the WAN to a Vanguard 6520 bridge attached to a Token Ring on the host side of the network where the frames pass into the FEP as Token Ring (LLC2) frames.

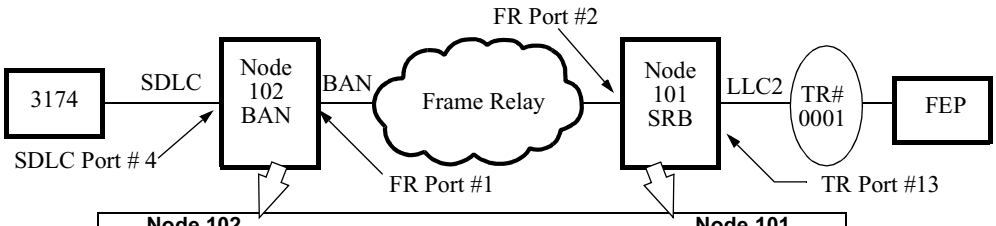

Node 102		Node 101
	Node Record	
HOME	Node Name	AWAY
102	Node Address	101
102	Node Number	101
	FR Port Records	
1	Port Number	2
FRI	Port Type	FRI
SIMP	Connection Type	SIMP
INT	Clock Source	EXT
64000	Clock Speed	64000
1	Highest Station Number	1
NORM	Frame Sequence Counting	NORM
NORM	Packet Sequence Counting	NORM
NONE	Control Protocol Output	NONE
0	High Priority Station	0
	SDLC Port Record	
4	Port Number	13
SDLC	Port Type	TR
TPAD	Subtype	N/A
None	Port Control	N/A
FDX	Type of Line	N/A
TWA	Transmission Type	N/A
0	HPDA Response	N/A
INT	Clock Source	N/A
9600	Clock Speed	N/A
1	Number of Controllers	N/A
	TR Port Record	
N/A	LAN Cable Type	STP
N/A	Port Mac Address	08-00-3E-00-1B-A6
N/A	Local Ring Number	0001
N/A	Ring Speed	4Mbps
N/A	Transmit Queue Limit	50
N/A	Active Monitor Control	ENABLE
N/A	Bridge Link Number	1
N/A	Router Interface Number	1
	FRI Station Record Table	
1	Port Number	2
1	Station Number	1
BYPASS	Station Type	BYPASS
16	DLCI	16
16000	CIR	16000
16000	BC	16000
50	End to End Transit	50
Normal	Congestion Mode	Normal
Disabled	Frame Segmenter	Disabled
	PVC Table	
N/A	Source	FRI-2s1
N/A	Destination	LCON-2

This is customer-specific. It must match the ring number of the customer Token Ring. This value must be unique from the BAN virtual ring number

Station Type must be set to BYPASS to perform BAN frame formatting

Figure 43. SDLC TPAD BAN Example

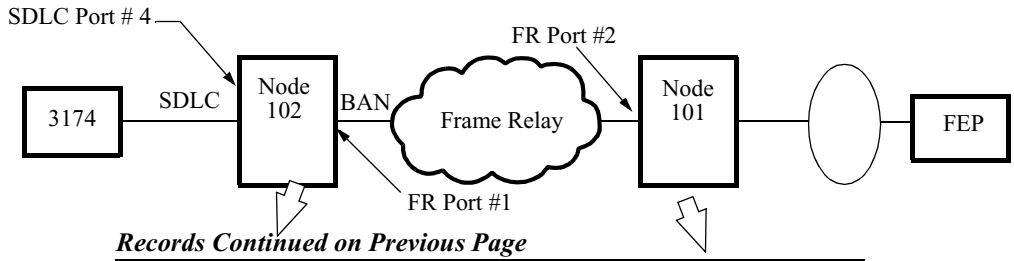

Records Continued on Previous Page

	Node 102		Node 101
		SDLC Station Table	
	4	Port Number	N/A
	1	Station Number	N/A
	C1	Station Address	N/A
	7	K Frame Window	N/A
	FRS-1C1	Autocall Mnemonic	N/A
	XIDs	QLLC Options	N/A
	020 00180AE29	QLLC XID Value	N/A
	(blank)	X.25 Network Password	N/A
	(blank)	Calling Address	N/A
	C3000000	Protocol ID	N/A
	(blank)	Station Subaddress	N/A
	00	Group Address	N/A
	--,--,--,--,--,--,--,--	CUG Membership	N/A
	OFF	Billing Records	N/A
	MED	Traffic Priority	N/A
	NONE	Protection Level	N/A
	2	Reconnection Timeout	N/A
	4	Reconnection Tries Limit	N/A
		LLC_-SDLC FR Station Table	
	1	*Frame Relay Port Number	N/A
	1	*Frame Relay Station Number	N/A
	BAN	1490 Encapsulation	N/A
New BAN parameters	40:00:00:00:99:00	BAN MAC Address	N/A
	44:00:00:00:10:88	BNI MAC Address	N/A
	0102	FR Virtual Ring Number	N/A
	04	Internal SAP	N/A
	04	External SAP	N/A
	4	External PU Type	N/A
	WAIT	Initiate TEST Frame	N/A
	DEFAULT	LLC Profile Name	N/A
	FF	QLLC Station Address	N/A
	NONE	QLLC Options	N/A
	(blank)	QLLC XID Value	N/A
	(blank)	X.25 Network Password	N/A
	(blank)	Calling Address	N/A
	C3000000	Protocol ID	N/A
	blank	Autocall Mnemonic	N/A
	NO	HuntGroup type	N/A
	1	HuntGroup Number	N/A
	--,--,--,--,--,--,--,--	CUG Membership	N/A
	OFF	Billing Records	N/A
	MED	Traffic Priority	N/A
	NONE	LLC Options	N/A

Records Continued on Next Page

Figure 44. SDLC BAN Example

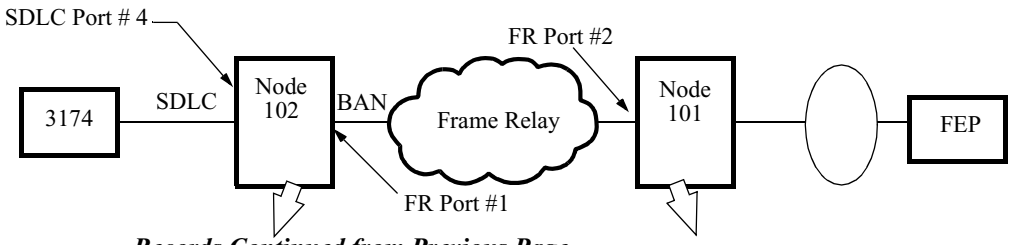

Records Continued from Previous Page

Node 102		Node 101
	Route Selection Table	
1	Entry Number	N/A
10299	Address	N/A
LSC-FR1	#1 Destination	N/A
1	#1 Priority	N/A
	Mnemonic Table	
1	Entry Number	N/A
FRS-1C1	Mnemonic Name	N/A
10299	Call Parameters	N/A
	Bridge Parameters	
N/A	Maximum Number of Bridge Links	36
N/A	STPE Control	MAN
N/A	Bad Hello Threshold	15
N/A	Bad Hello Timeout	15
N/A	Largest Frame Size	2052
N/A	Virtual Ring Number	0001
N/A	Bridge WAN Data Priority	HIGH
N/A	Bridged Protocols	NONE
	Bridge Link Table	
N/A	Entry Number	6
N/A	Bridge Type	SR
N/A	Bridge ID	2
N/A	Hop Count Limit	7
N/A	Largest Frame Size	2052
N/A	MAC Address Filter Action	NONE
N/A	Protocol Filter Action	NONE
N/A	NETBIOS Name Filter Action	NONE
N/A	STPE Link State	FORWARD
N/A	Link Mode	RFC1294
N/A	Virtual Ring Number	0102
N/A	Entry NUmber	1
N/A	Hop Count Limit	7
N/A	Largest Frame Size	2052
N/A	STPE Link State	FORWARD
N/A	Entry Number	6
N/A	Bridge Type	SR
N/A	Bridge ID:	2
	LAN Connection Table	
N/A	Entry Number	2
N/A	LAN Forwarder	Type: BRID
N/A	Bridge-Link Number	6
N/A	Encapsulation Type	RFC1294
N/A	Autocall Mnemonic	(blank)
N/A	LCON Queue Limit	16000
N/A	Billing Records	OFF
N/A	Traffic Priority	HIGH

Required for BAN support

This must match virtual ring number of BAN station

This parameter must be set to BROUT if you want remote access using IP/ Telnet

Required for BAN support

Figure 45. SDLC BAN Example

Ethernet TPAD Configuration for BAN

Figures 46, 47, 48, and 49 show the critical parameters you need to configure to convert Ethernet LLC traffic to BAN frame format.

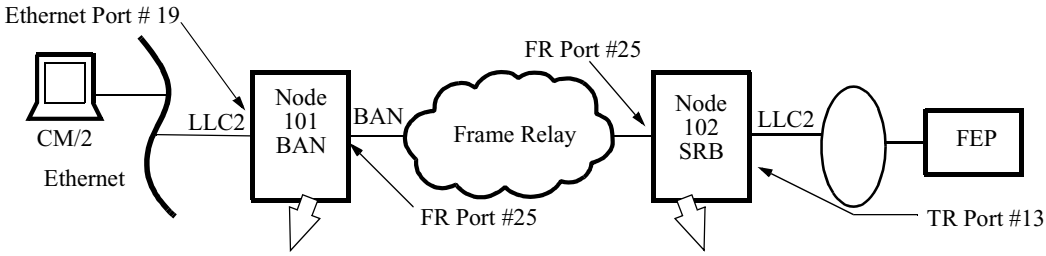

Node 101		Node 102
	Node Record	
HOME	Node Name	AWAY
101	Node Address	102
101	Node Number	102
	Port Records	
19	Port Number	13
ETH	Port Type	TR
AUI	LAN Cable Type	STP
10:00:7C:00:EC:77	Port MAC Address	10:00:7C:00:D8:69
50	Transmit Queue Limit	50
N/A	Local Ring Number	0001
N/A	Ring Speed	4Mbps
N/A	Active Monitor Participation Control	ENABLE
0	Carrier Sense Filter	N/A
0	Collision Detect Filter	N/A
4	Bridge Link Number	1
	FR Port Record	
25	Port Number	25
FRI	Port Type	FRI
SIMP	Connection Type	SIMP
INT	Clock Source	EXT
64000	Clock Speed	64000
1	Highest Station Number	1
NORM	Frame Sequence Counting	NORM
NORM	Packet Sequence Counting	NORM
NONE	Control Protocol Output	NONE
0	High Priority Station	0
	Mnemonic Table	
FRSLAC	Mnemonic Name	N/A
10199	Call Parameter	N/A

Records Continued on Next Page

Figure 46. BAN Ethernet Example

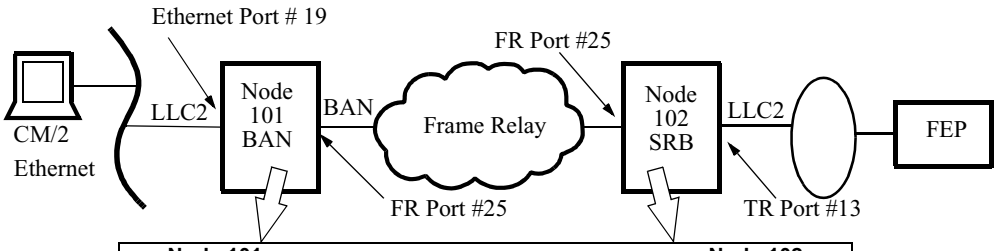

Node 101		Node 102
	LLC-SDLC Conversion Ethernet Station	
40:06:31:BB:80:44	External MAC Address	N/A
04	Internal SAP	N/A
04	External SAP	N/A
2.1	External PU Type	N/A
802.3	Ethernet Frame Type	N/A
ON	Initiate Test Frame	N/A
DEFAULT	LLC Profile Name	N/A
01	QLLC Station Address	N/A
NONE	QLLC Options	N/A
BLANK	XID Value	N/A
BLANK	X.25 Network Password	N/A
BLANK	Calling Address	N/A
C3000000	Protocol ID	N/A
frslac	Autocall Mnemonic	N/A
NONE	HuntGroup Type	N/A
1	HuntGroup Number	N/A
--,--,--,--,--,--,--,--	CUG Membership	N/A
OFF	Billing Records	N/A
MED	Traffic Priority	N/A
NONE	LLC OPtions	N/A
	Route Selection Table	N/A
10199	Address	N/A
lsc-fr1	#1 Destination	N/A
	LLC-SDLC Conversion Frame Relay Station	
1	Entry Number	N/A
25	Frame Relay Port Number	N/A
1	Frame Relay Station Number	N/A
BAN	1490 Encapsulation	N/A
40:00:00:00:00:99	BAN MAC Address	N/A
40:00:00:00:10:88	BNI MAC Address	N/A
0101	Frame Relay Virtual Ring Number	N/A
04	Internal SAP	N/A
04	External SAP	N/A
2.1	External PU Type	N/A
ON	Initiate Test Frame	N/A
DEFAULT	LLC Profile Name	N/A
FF	QLLLC Station Address	N/A
NONE	QLLC Options	N/A
BLANK	XID Value	N/A
BLANK	X.25 Network Password	N/A
BLANK	Calling Address	N/A

Figure 47. Ethernet BAN Example

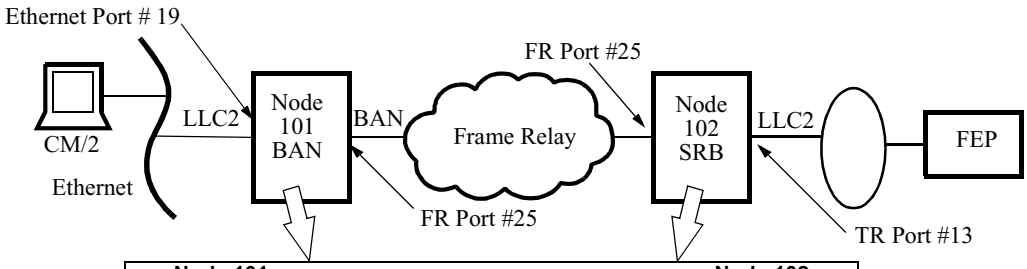

Node 101		Node 102
	LLC-SDLC Conversion Frame Relay Station (continued)	
C3000000	Protocol ID	N/A
BLANK	Autocall Mnemonic	N/A
NO	HuntGroup Type	N/A
1	HuntGroup Number	N/A
--,--,--,--,--,--,--,--	CUG Membership	N/A
OFF	Billing Records	N/A
MED	Traffic Priority	N/A
NONE	LLC Options	N/A
	FRI Stations Record	
1	Station Number	1
BYPASS	Station Type	BYPASS
16	DLCI	16
N/A	**Bridge Parameters**	
N/A	Maximum Number of Bridge Links	36
N/A	STPE Control	MAN
N/A	Bad Hello Threshold	15
N/A	Bad Hello Timeout	15
N/A	Largest Frame Size	2052
N/A	Virtual Ring Number	0001
N/A	Bridge WAN Data Priority	HIGH
N/A	Bridged Protocols	NONE
N/A	**Bridge Link Parameters**	
N/A	Entry Number	1
N/A	Hop Count	7
N/A	Largest Frame Size	2052
N/A	MAC Address Filter Action	NONE
N/A	Protocol Filter Action	NONE
N/A	NetBIOS Name Filter Action	NONE
N/A	STPE Link State	FORWARD
N/A	Entry Number	5
N/A	Bridge Type	SR
N/A	Bridge ID	1
N/A	Hop Count Limit	7
N/A	Largest Frame Size	2052
N/A	MAC Address Filter Action	NONE
N/A	Protocol Filter Action	NONE
N/A	NetBIOS Name Filter Action	NONE
N/A	STPE Link State	FORWARD
N/A	Link Mode	RFC1294
N/A	Virtual Ring Number	0101

Figure 48. Ethernet BAN Example

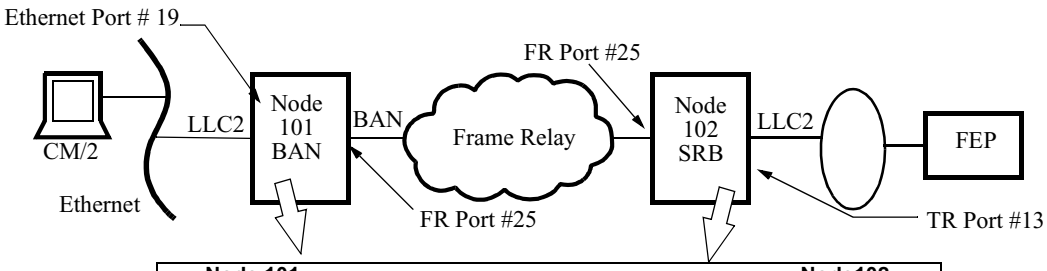

Node 101		Node102
	LAN Connection Parameters	
N/A	Maximum Number of LAN Connections	32
N/A	**LAN Connection Table**	
N/A	Entry Number	1
N/A	LAN Forwarder Type	BRID
N/A	Bridge Link Number	5
N/A	Encapsulation Type	RFC1294
N/A	Autocall Mnemonic	(BLANK)
N/A	**PVC Setup Table**	
N/A	Entry Number	1
N/A	Source	fri-25s1
N/A	Destination	Icon-1

Figure 49. Ethernet BAN Example

Call Redirection through 8500 Example

Call Redirection

Call Redirection for SNA LLC stations allows the call originator to redirect a call if a particular LLC station at the remote is not operational.

Figure 50 shows Call Redirection through the 8500 using enhanced X.25 Diagnostic Codes:

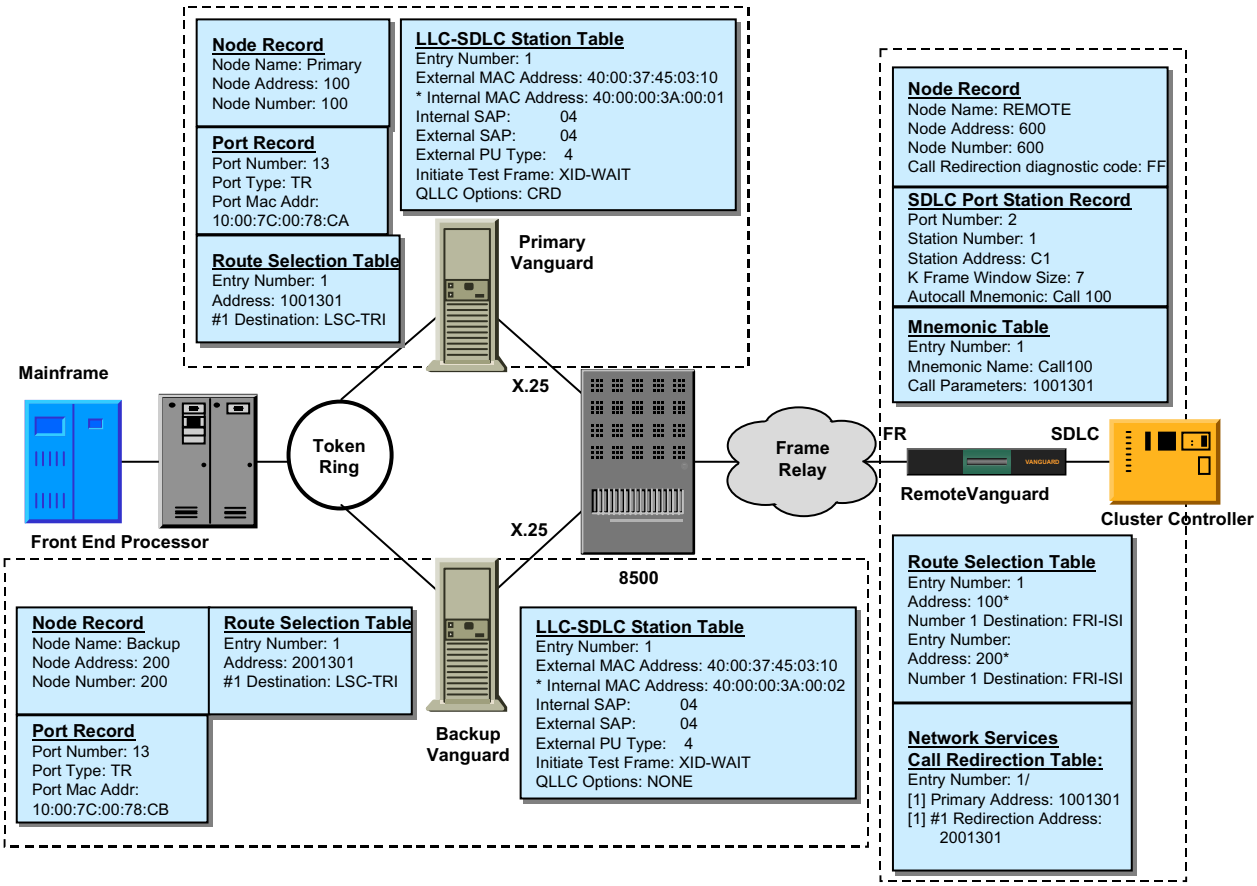

Figure 50. Call Redirection through 8500

Vanguard 8500 Special Considerations

Special Considerations when running through the Vanguard 8500:

- If the 8500's X.25 Diagnostic Code parameter is set to Enhanced, the call originating node must be configured with the call redirection Diagnostic Code =FF. This way a call is redirected upon receiving a clear diagnostic of 0xFF from the 8500.
- If the 8500's X.25 Diagnostic Code parameter is set to CCITT, no additional configuration changes are needed, the default code (BB) is used.
- If the 8500 is not on the network, no additional configuration changes are needed, the default code (BB) is used.
- The Call Redirection Diagnostic Code parameter is found in the Node Record Configuration. Call Redirection is configured in the call originator's Node Record.

Note

If there is an intermediate node link in the X.25 network then the X.25 Options parameter should be set to “CAUSE”.

For additional information on the configuration of Frame Relay ports and stations, see Figure 16.

Call Redirection Tables

When you configure a port for Call Redirection, inbound calls are sent to alternate X.25 addresses as they are specified in the Call Redirection Table. The Call Redirection Table should be configured on the port that the call originates from.

The Call Redirection Table supports wildcarding. The primary and redirection addresses may contain wildcard characters. The length of a redirection address cannot exceed the length of the primary address.

This table shows redirection addresses with wildcard characters in them and the new addresses that incoming calls would be directed to:

Original Address	*Redirection Address*	*New Address*
1001301	200	200
	200**	20013
	200***	200130
	200****	2001301
	200*******	2001301

Note

If more than six addresses need to be redirected, the wild card characters are necessary. Every LLC-SDLC station uses unique entry numbers.

Original Address	*#1 Redirection Address*	*New Address*
10013**	20005**	Any address from 1001300 to 1001399 would be directed to 2001300 to 2001399.

Example

Original Address	*New Address*
10013**01**	20005**01**
10013**02**	20005**02**
10013**03**	20005**03**

Reverse LLC2 Conversion

Introduction

Reverse LLC2 Conversion lets you pass LLC2 frames from a local Token Ring or Ethernet LAN across a Frame Relay or X.25 network, directly into a FEP as Frame Relay RFC 1490, SDLC data frames.

How It Works

Reverse LLC2 Conversion involves passing converted data frames from the Conversion node residing on the LLC2 TPAD side of your network to the Frame Relay RFC 1490, SDLC HPAD side.

To accomplish reverse conversion, LLC2 frames pass from the Token Ring or Ethernet LAN into the SDLC-to-LLC2 Conversion node at the LLC2 TPAD where they are converted from LLC2 to QLLC. The converted frames travel across the network to the HPAD where they are converted into RFC 1490 or SDLC frames and passed on to the FEP or native X.25 network.

Reverse LLC2 Conversion for Token Ring

Figure 51 shows single box and double box solutions for Reverse LLC2 Conversion on Frame Relay and X.25 networks.

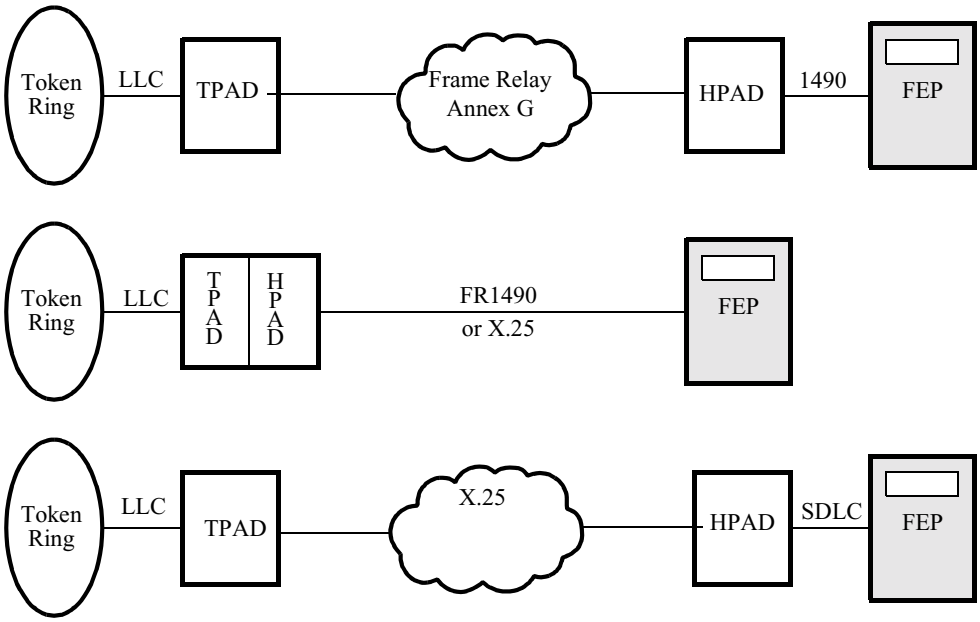

Figure 51. Example of Reverse Conversion

Reverse LLC2 Conversion for Ethernet

Figure 52 shows how to accomplish reverse conversion in a single-box solution. LLC2 frames pass from the Ethernet LAN into the SDLC-to-LLC2 Conversion node at the LLC2 TPAD where they are converted from LLC2 to RFC 1490. The converted frames travel across the Frame Relay network to the FEP. This application also applies to a two-node solution as well.

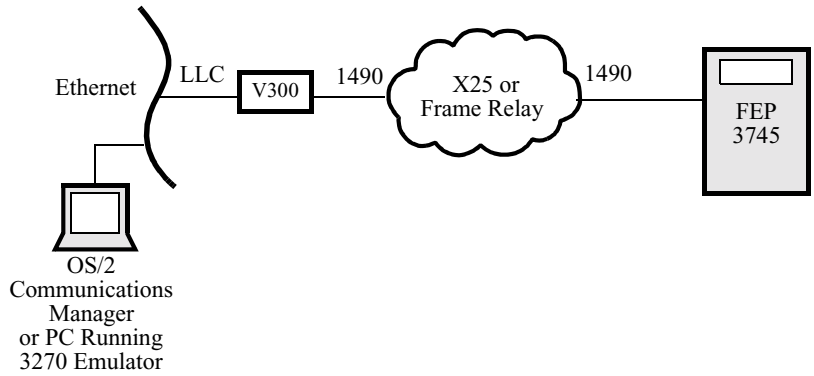

Figure 52. Vanguard Single Node Reverse Conversion

What You Need to Configure

For Reverse LLC2 Conversion, you configure the same tables used for normal SDLC-to-LLC2 LAN conversion:

For the TPAD node...	*For the HPAD node...*
LLC to SDLC Station table	Port record
Mnemonic table	SDLC Station record
Route Selection table	Route Selection table
Port record	Node record
Node record	

The LLC to SDLC Station table contains critical parameters you need to set in order to perform reverse conversion.

LAN Parameters

LAN parameters for the SDLC-to-LLC2 LAN Conversion node are configurable through the Profile table. Normally, the default Profile table parameters are adequate for SDLC-to-LLC2 Conversion configuration.

See the “LLC-SDLC Profile Table Parameters” section on page 94 for details on these parameters.

Critical Parameters

You need to configure the following critical parameters in the LLC2 to SDLC Station table to perform Reverse LLC2 Conversion:

- External PU TYpe
- QLLC Station Address
- QLLC XID Value
- Initiate Test Frame

See the “LLC-SDLC Station Table Parameters” section on page 98 for details on these parameters.

Token Ring Configuration Example

Figure 53 shows an example of the critical parameters for configuring Reverse LLC2 Conversion for a Token Ring LAN running Frame Relay or X.25 networks. As shown, many of the same station table parameters used for normal LLC2 conversion also apply to Reverse LLC2 Conversion.

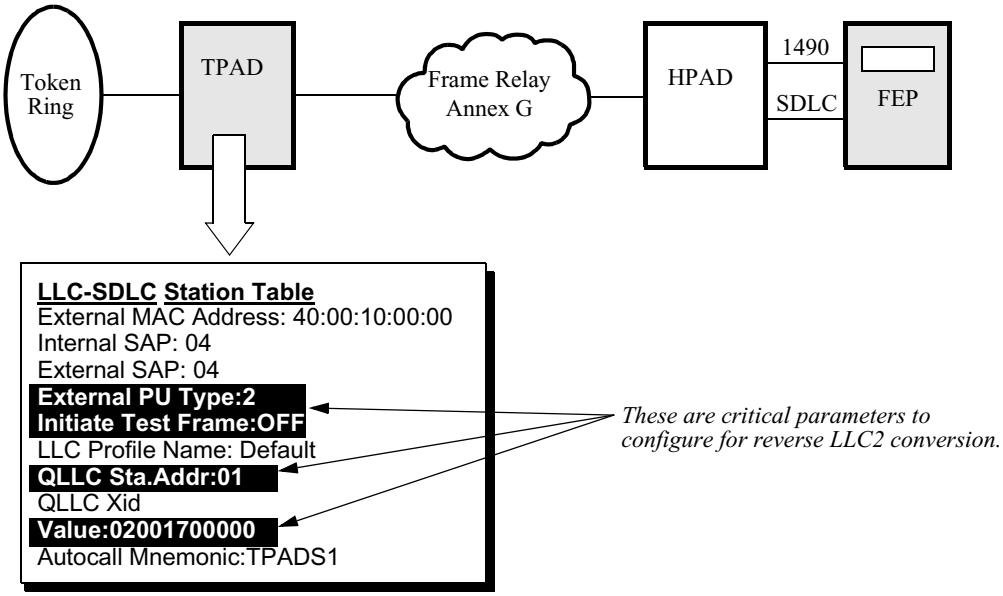

Figure 53. Token Ring Configuration Example

Example of Ethernet Reverse Conversion Configuration

Figure 54 shows an example of the critical parameters for configuring Reverse LLC2 Conversion for a Ethernet LAN on Frame Relay or X.25 networks. As shown, many of the same station table parameters used for normal LLC2 conversion also apply to Reverse LLC2 Conversion.

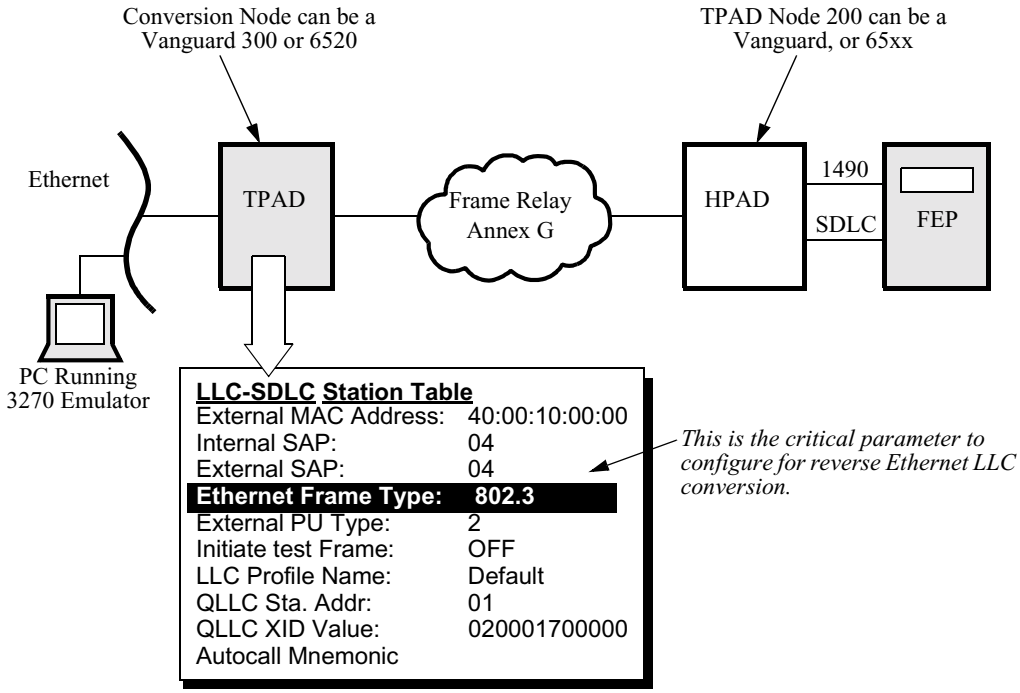

Figure 54. Vanguard Ethernet-Based Reverse Conversion

SDLC-to-LLC2 Conversion Profile Table

Introduction

This section describes the Profile table parameters for SDLC-to-LLC Conversion or Reverse Conversion.

Normally, the default parameters in this table are sufficient for most operations, so it is unnecessary to reconfigure the parameters for SDLC-to-LLC2 Conversion, unless you want to customize the LAN parameters for your specific application.

Follow These Steps...

Follow these steps to access and configure the LLC-SDLC Profile table:

Step	Action	Result
1	Select **Configure -> Configure LLC to SDLC Table** from the CTP Main menu.	The Configure LLC to SDLC Tables menu appears.
2	Choose **LLC Profile Table** for Token Ring, Ethernet or Frame Relay conversion.	The Profile Table appears (see Figure 55).

Example of LLC-SDLC Profile Table

Figure 55 shows the Profile table.

```
            LLC-SDLC Profile Table Conversion


Entry Number: 1/
[1]  LLC profile name: DEFAULT/
[1]  T1 reply timer: 1/
[1]  T2 Rx ack timer: 1/
[1]  Ti inactivity timer: 30/
[1]  N2 Retry count: 8/
[1]  N3 Ack delay count: 3/
[1]  Tx window size: 7/
[1] TA Startup Timer:
```

Figure 55. LLC-SDLC Profile Table

LLC-SDLC Profile Table Parameters

Introduction

From the LLC-SDLC Profile table, you can configure these parameters:

Entry Number

Range:	1 to 8
Default:	1
Description:	Entry number used to reference this table.

Profile Name:

Range:	0 to 8 alphanumeric characters
Default:	(blank)
Description:	The name of this profile entry, referenced by LLC-SDLC Conversion stations for their operating parameters.

T1 Reply Timer:

Range:	1 to 25
Default:	3
Description:	This Ack timer is used by the station to detect a failure of the remote station to acknowledge an outstanding I frame or supervisory frame with poll bit set to 1. Time is in seconds.

T2 Rx Ack Timer:

Range:	1 to 255
Default:	3
Description:	The Receive Ack timer is used by the station to determine how long it will withhold acknowledgment of frame(s) from the remote station that require acknowledgment. This is a method of reducing the amount of acknowledgments generated by a link station. When this timer expires, the link station should immediately send an acknowledgment for all received frames not yet acknowledged. Time is in tenths of seconds. **■ Note** A Table Boot must be performed for changes to this parameter to take effect.

T1 Inactivity Timer

Range:	2 to 255 (seconds)
Default:	30
Description:	The Idle Timer is used by a station to detect an inoperative condition of the logical link. This timer is started when the link becomes idle (no data to pass and no outstanding acknowledgments), and if it expires, the station sends a supervisory frame with the poll bit set to 1. **■ Note** You must perform either a Table boot or a Node boot for changes to this parameter to take effect.

N2 Retry Count

Range:	1 to 20
Default:	8
Description:	This count defines the number of times an I frame or supervisory frame with poll bit set to 1 will be transmitted due to T1 acknowledgment timeout before the logical link will be declared down (inoperative). **■ Note** You must perform either a Table boot or a Node boot for changes to this parameter to take effect.

N3 Ack Delay Count

Range:	1 to 15
Default:	3
Description:	The Receive Count is used in conjunction with T2 to reduce the amount of acknowledgments a station generates. The receive count is used by a station to determine how many frames it will receive from the remote station while withholding acknowledgment of these frames. This is a method of reducing the amount of acknowledgments generated by a link station. When this count expires, the link station should immediately send an acknowledgment for all received frames not yet acknowledged. **■ Note** You must perform either a Table boot or a Node boot for changes to this parameter to take effect.

TX Window Size

Range:	1 to 15
Default:	7
Description:	Transmit window size is the maximum number of I frames a station may transmit without acknowledgment. **■ Note** You must perform either a Table boot or a Node boot for changes to this parameter to take effect.

TA Startup Timer

Range:	1 to 255
Default:	10
Description:	The TA Timer is used by a station as the retry timer when establishing a logical link. Time is in seconds.

LLC-SDLC Station Table

Introduction

This section describes how to configure the LLC-SDLC Station table for Token Ring and Ethernet LANs, Frame Relay, or Reverse Conversion.

Follow These Steps...

Follow these steps to display the LLC-SDLC Station table:

Step	Action	Result
1	Select **Configure -> LLC to SDLC Tables** from the CTP Main menu.	The LLC to SDLC Tables menu appears.
2	Choose one of LLC-SDLC Token Ring Stations table, LLC-SDLC Ethernet Stations table, or Frame Relay Station Table	The corresponding Station Table Configuration appears (see Figure 56).

Example of LLC-SDLC Station Table

Figure 56 shows the LLC-SDLC Station table parameters for Token Ring, Ethernet, and Frame Relay. These parameters will vary depending on the type of station you configure.

```
LLC-SDLC XXXXXX Station Table Conversion

[1]*Frame Relay Port Number: 1
[1]*Frame Relay Station Number: 1
[1]  Ethernet Frame Type: 802.3
[1] 1490 Encapsulation Type: BAN
[1]  BAN MAC Address:
[1]  BNI MAC Address:
[1]  Frame Relay DLCI Virtual Ring Number:
[1]  External MAC Address: 40:00:00:00:10:89
[1]*Internal MAC Address: 10:00:7C:00:D8:46
[1]  Internal SAP: 04
[1]  External SAP: 04
[1]  External PU Type: 4
[1]  Initiate TEST Frame: ON
[1]  LLC Profile Name: DEFAULT
[1]  QLLC Station Address: FF
[1]  QLLC Options: NONE
[1]  XID Value: (blank)
[1]  X.25 Network Password: (blank)
[1]  Calling Address: (blank)
[1]  Protocol ID: C3000000
[1]  Autocall Mnemonic: rrtest
[1]  HuntGroup type: NO
[1]  HuntGroup Number: 1
[1]  CUG Membership: --,--,--,--,--,--,--,--
[1]  Billing Records: OFF
[1]  Traffic Priority: MED
[1]  LLC Options: NONE
[1]*Protection Level: FULL_DCP
[1]  Reconnection Timeout: 5
[1]  Reconnection Tries Limit: 5
[1]  Idle timer: 0
[1]  Verify Connection timer: 0
[1]  Unsuspend Wait timer: 180
```

Figure 56. LLC-SDLC Station Table

LLC-SDLC Station Table Parameters

Parameters

These parameters appear when you access the LLC-SDLC Station Table. Some parameters appear depending on the type of Station table you are configuring.

Entry Number

Range:	(See Below)
LLC LAN Conversion Stations: Vanguard 7300 Series - 1,000 per interface, 2,000 per node (Release 6.0 and greater) Vanguard 34x, 6435/55 - 250 per interface, 500 per node Vanguard 320 - 64 per node **LLC FRI Conversion Stations:** Vanguard 7300 Series - 2,000 per node (Release 6.1 and greater) Vanguard 7300 Series - 1,000 per node (Prior to Release 6.1) Vanguard 34x, 6435/55 - 250 per node Vanguard 320 - 64 per node	
Default:	1
Description:	Specify the entry number used to reference the station table for this station.

■Note

This parameter appears if Frame Relay Station table is selected. You must perform a Node boot for changes to either of these parameters to take effect.

FRI Port Number

Range:	1 to 54
Default:	1
Description:	The port number of the Frame Relay port to which this LLC-SDLC Conversion station is connected. **■Note** You must perform a Node boot for changes to this parameter to take effect.

Note

This parameter appears if Frame Relay Station table is selected.

FRI Station Number

Range:	1 to 254
Default:	1
Description:	The Frame Relay station number on the Frame Relay port to which this LLC-SDLC Conversion station is connected. To obtain the corresponding DLCI number, see the configuration for that Frame Relay station. **Note** You must perform a Node boot for changes to this parameter to take effect.

Note

This parameter appears if you selected Frame Relay.

1490 Encapsulation

Range:	LLC,BAN
Default:	LLC
Description:	Frame Relay 1490 Frame Format used to encapsulate LLC frames sent/received by this station. • LLC - LLC Frame is encapsulated in 1490 with the NLPID for 802.2. • BAN - LLC Frame is encapsulated in 1490 with the BAN & BNI MACs, and NLPID for 802.5. **Note** You must perform a LLC Station boot for changes to this parameter to take effect.

Note

These parameters appear if you select BAN at 1490 Encapsulation parameter

BAN MAC Address

Range:	00-00-00-00-00-00 to FF-FF-FF-FF-FF-FF
Default:	00-00-00-00-00-00
Description:	This is the Source MAC Address inserted into the BAN encapsulated frame. It should be unique within the network. **Note** You must perform a LLC Station boot for changes to this parameter to take effect.

BNI MAC Address

Range:	00-00-00-00-00-00 to FF-FF-FF-FF-FF-FF
Default:	00-00-00-00-00-00
Description:	This is the Destination MAC address inserted into the BAN encapsulated frame. This should normally be entered in non-canonical format. 4F:FF:00:00:00:00 is the normal default for an IBM Front End Processor. **■Note** You must perform a LLC Station boot for changes to this parameter to take effect.

Frame Relay DLCI Virtual Ring Number

Range:	0000 to 0FFF hexadecimal
Default:	0000
Description:	This is the virtual ring number that is shared with the other PUs that are associated with the same DLCI. If a value of zero is entered for this, this ring number will not be inserted into the Route Indicator Field. **■Note** You must perform a Station boot for changes to this parameter to take effect.

Internal MAC Address

Range:	00:00:00:00:00:00 to ff:ff:ff:ff:ff:ff
Default:	The default source MAC address is burned-in address or the locally administered MAC address configured in the Port record.

Internal MAC Address

Description:	Specify the Internal MAC Address for this conversion station. Use this format: **nn:nn:nn:nn:ss:ss** Where: • nn:nn:nn:nn must be the same for all stations associated with this LAN port, and it must be unique to this node. • ss:ss must be different for each station associated with this LAN port, unless SAP multiplexing is being used to uniquely differentiate the stations. • MAC address must be unique within the network. **■Note** You must perform a Node boot for changes to this parameter to take effect.

■Note

This parameter appears if you select Token Ring Station Table.

External MAC Address

Range:	00:00:00:00:00:00 to ff:ff:ff:ff:ff:ff
Default:	00:00:00:00:00:00
Description:	The MAC address of the LAN device associated with this station. **■Note** You must perform a Session/Station boot for changes to this parameter to take effect.

Hunt Group Type

Range:	NO, SEC, PRI
Default:	NO
Description:	Lets you include this SDLC-to-LLC Conversion station in a primary or secondary Hunt Group. • NO — Means this SDLC-to-LLC Conversion is not included in a Hunt Group. • PRI — Means this SDLC-to-LLC Conversion station belongs to a primary Hunt Group. • SEC — Means this SDLC-to-LLC Conversion station belongs to a secondary Hunt Group. Consider the following when configuring this parameter: • If the QLLC Address is set to equal the broadcast address for the SDLC-to-LLC Conversion station (FF) and you want the station to belong to the Hunt Group, select PRI. • If the QLLC address is a secondary address and you want the station to belong to the Hunt Group, select SEC. **■ Note** You must perform a Station boot for changes to this parameter to take effect.

Hunt Group Number

Range:	1 to 3
Default:	1
Description:	This parameter specifies the Hunt Group number within the selected Hunt Group type. The format for a Hunt Group number is: **LSC-XXY#** Where*:* • LSC - identifies this station as a SDLC-to-LLC Conversion conversion station • XX - identifies the type of station, for example, ET (Ethernet), FR (Frame Relay), or TR (Token Ring) • Y - identifies the Hunt Group type for this station as P (primary) or S (secondary) • # identifies the Hunt Group number, either 1, 2, or 3. **■ Note** You must perform a Station boot for changes to this parameter to take effect.

Internal SAP

Range:	01 to FE hexadecimal
Default:	04
Description:	Specify the local SAP of this station. Specify 04 for each station with a unique MAC address. For example, when using internal MAC addresses, specify 04 for each station. See “Configurable Internal MAC Addresses” section on page 29 for details on configuring internal MAC addresses. If there is more than one station on the port, as in LLC2 multiplexing, specify a multiple of 04 for each subsequent station. **■Note** You must perform a Session/Station boot for changes to this parameter to take effect.

External SAP

Range:	01 to FE hexadecimal
Default:	04
Description:	The SAP residing at the LAN-attached device associated with this station. **■Note** You must perform a Session/Station boot for changes to this parameter to take effect.

*Link Station Type

Range:	SLAC, 5494, SNABSC
Default:	SLAC
Description:	• SLAC - LLC-SDLC Conversion (via QLLC) • 5494 - APPEN LEN Link Station for support of 5394 type downstream controllers • SNABSC - SNA PU type 2.0 Link Station for support of SNA to Bisync Conversion **■Note** You must perform a node boot for changes to 5494 to take effect.

External PU Type

Range:	2, 2.1, 4
Default:	4
Description:	The PU type of the device associated with this station. For example, an AS400 can be assigned the PU type of 2.1, and a 3745 is assigned the PU type of 4. **■Note** You must perform a Session/Station boot for changes to this parameter to take effect.

Initiate Test Frame

Range:	OFF, ON, WAIT, XID_WAIT
Default:	ON
Description:	Controls whether TEST poll frames will be locally initiated during link setup. Choose one of the following: • ON - This side generates TEST poll frames. • OFF - The other side generates TEST poll frames. • WAIT - TEST poll is sent when inbound call request is received by corresponding SLAC QLLC station. Local re-route is not supported by the WAIT option. • XID-WAIT - TEST poll is sent until a TEST response is received. XID is not sent until a call is established.

LLC Profile Name

Range:	0 to 8 alphanumeric characters
Default:	Default
Description:	The name of the LLC-SDLC Conversion Profile Table entry that provides the operating parameters for this station. Entering the default value applies the default parameters. **■Note** You must perform a Session/Station boot for changes to this parameter to take effect.

LLC Options

Range:	NONE,NOCALLXID,1490APPC, SAVELEARNED
Default:	NONE
Description:	Select LLC options on this station as follows: • NONE - No special LLC station option. • NOCALLXID - An XID is not sent from this LLC Station to the external PU upon the LLC Station call establishment. • 1490APPC - Enables the Frame Relay LLC Station to send the APPC NLPID when configured as a Type 2.1 External PU Type. • SAVELEARNED - Saves the learned external MAC address into the CMEM record for this LAN attached LLC station. Only applies if the External MAC address is set to 00:00:00:00:00:00. • BACKUP - Provides a backup station if the primary fails. Each station on the LAN needs to be associated with a different LAN port. Each station has the same: – Internal MAC address – External MAC address – Internal SAP – External SAP The stations are configured identically to exclude them from sending and receiving data at the same time. If one station goes down, the idle station is activated as the backup. • Negotiate - Used to allow LLC station role to be negotiated. **■ Note** You must be use this parameter with the Initiate Test Frame parameter set to WAIT. **■ Note** Where applicable, the entry may be a combination of the options. For example, NOCALLXID + SAVELEARNED.

QLLC Station Address

Range:	01 to FF hexadecimal
Default:	01
Description:	The station address used for the QLLC control procedures. This parameter is used to differentiate between QLLC primary and secondary stations. • Select a value in the range 01-FE for QLLC secondary (TPAD) stations. • Select FF for QLLC primary (HPAD) stations. **■ Note** You must perform a Session/Station boot for changes to this parameter to take effect.

QLLC Options

Range:	NONE, CUG, QRRs, XIDs, XID3
Default:	NONE
Description:	Select options for this LSC station: • NONE - No option specified. • CUG - The check closed user group option filters incoming calls, and inserts the closed user group facility in outgoing calls. • QRRs - QLLC Primary (HPAD) sends QRR after QLLC link comes up. • DFC - The station waits the amount of time specified by the call timer before placing the first call. • CRD - Call Redirection indicates that the X.25 call should be redirected. When the clear request packet is sent back to the call originator it contains an X.25 diagnostic code that signals call redirection. **■ Note** You must perform a Station boot for changes to this parameter to take effect.

XID Value

Range:	0 to 14 hexadecimal characters
Default:	blank
Description:	When External PU Type is set to 4, this value is sent by the LLC to the SDLC Station to the Front End Processor (FEP). If the External PU Type is set to 2 then the value is transported to the SDLC HPAD or LLC to SDLC conversion station in the upstream Vanguard, using a QXID exchange between the Vanguards, and then to the Front End Processor. **■Note** If the External PU Type Parameter is set to 2.1, the XID Value parameter is not used unless the AS/400 Communications Server Option has been enabled. Reference the *AS/400 Communications Server Manual,* Part Number T0101-07 for more information.

■Note

This parameter appears if Ethernet Station table is selected.

Ethernet Frame Type

Range:	802.3, Ethernet
Default:	802.3
Description:	Indicates the encapsulation to use on the LLC frame that is sent and received on the Ethernet This parameters appears only when you configure the LLC-SDLC Ethernet Stations table. You must set this parameter to perform Ethernet-based LLC Conversion. **■Note** You must perform a Station boot for changes to this parameter to take effect.

X.25 Network Password

Range:	0 to 24 hexadecimal
Default:	Blank
Description:	The X.25 network password, which can be up to 12 bytes long, is inserted in the CUD of the Call Request packet. Padding with spaces must be added as necessary. Configure the Protocol ID to C3 01 00.

Protocol ID:

Range:	0 to 8 hexadecimal
Default:	C3000000
Description:	The protocol identifier is inserted into the CUD of the Call Request packet, and indicates that the X.25 call is for a QLLC logical circuit.

Calling Address

Range:	0 to 15 decimal digits
Default:	(blank)
Description:	This is the full Calling Address inserted into the Call Request when autocalling is enabled.

Autocall Mnemonic

Range:	0 to 8 alphanumeric characters
Default:	(blank)
Description:	This mnemonic references the remote X.25 address which will be auto-called. If blank, then autocalling is disabled, and the other end should initiate the call.

CUG Membership

Range:	0 to 8 two-digit numbers
Default:	--,--,--,--,--,--,--,--,--
Description:	Closed User Groups (CUGs). This station may be a member of up to 8 different CUGs. Each CUG membership must be a two-digit number and separated by a comma. For example: **12,34,56,09,02,03** If blank, then no CUG membership is defined. CUG membership range is 00-99.

Billing Records

Range:	OFF, ON
Default:	OFF
Description:	This controls whether billing (accounting) records are created for calls on this station.

Traffic Priority

Range:	LOW, MED, HIGH, EXP
Default:	MED
Description:	Sets the traffic priority of X.25 calls generated by this station.

Protection Level

Range:	NONE, CP_ONLY, FULL_DCP
Default:	NONE
Description:	Specifies the level of data or connection protection for SDLC-to-LLC2 traffic on this port. The actual level for a call is negotiated to the lesser of this level and the level configured for the other end of the call. The range of values are described as follows: • NONE - No Protection. Data/Connection Protection is disabled. • CP_ONLY - Connection Protection Only is enabled. • FULL_DCP - Full Data and Connection Protection are enabled. When configuring DCP for an SDLC-to-LLC2 station, configure the Protection Level as FULL_DCP on both ends if you do not want your call dropped. If your call is dropped with FULL_DCP configured at both ends, try increasing the Reconnection Timeout value. **■ Note** You must perform a Node boot for changes to this parameter to take effect.

Reconnection Timeout

Range:	1 to 128
Default:	2
Description:	Specifies the number of seconds that DCP on the originating side waits between reconnection attempts.

Reconnection Tries Limit

Range:	0 to 127
Default:	4
Description:	Specifies the number of times DCP on the originating side attempts to reconnect before clearing the call. If 0 is entered, DCP attempts no reconnection.

Call Timer

Range:	0 to 300 seconds
Default:	0 seconds
Description:	Specify the time before the next call is made. If 0 is entered, the time to the next call is handled internally. **■Note** Call timer can be configured on one or both sides of the link. If you configure call timers at both ends, specify different times. This prevents call collision.

Link Idle Timer

Range:	0 to 65534 seconds
Default:	0 seconds
Description:	Specify the time the SDLC station should wait for a data frame before clearing the X.25 call. If set to 0, the call will never be cleared. **■Note** Configure idle time on one or both sides of the link. If configured for both sides, the side with the shorter idle timer will expire first and clear the X.25 call.

Verify Connection Timer Parameter

Range:	0 to 65534 seconds
Default:	0 seconds
Description:	Specifies how long the station should wait after the link has suspended, before verifying that the connection to the remote station is still active.

Unsuspend Wait Timer

Range:	0 to 65534 seconds
Default:	180 seconds
Description:	Specifies how long the station will wait in LINK_UNSUSPENDING state after receiving a call request before clearing the link. If 0 is entered, the station waits in LINK UNSUSPENDED state forever.

Booting SDLC-to-LLC2 Conversion Stations

Introduction

This section describes how to boot LLC2-SDLC station records and tables. To implement SDLC-to-LLC2 Conversion configuration changes, boot the appropriate station from the CTP Boot menu (see Figure 57).

Booting LLC2-SDLC Stations

The following procedure describes how to boot LLC2-SDLC stations:

Step	Action	Result
1	Select **LLC2 to SDLC Stations** from the Boot menu.	The LLC2-SDLC Stations menu appears.
2	Choose one of the following: • Token Ring Station • All Token Ring Stations • Choose Ethernet Station • All Ethernet Stations • Frame Relay Station • All Frame Relay Stations	The Entry Number: prompt appears. **Note** The All Stations Boot causes all the stations for the port type to be deallocated and recreated whether or not any parameter is changed. Booting a single station causes the station to be deallocated and recreated only if a parameter denoted by an asterisk is changed.
3	Enter the entry number of the station you want to boot. Enter **Y** to boot the station. Or: Enter **N** to cancel the boot procedure.	The Proceed? (y/n): prompt appears. The station boots. The message **Station XXX-xx1 Boot Complete** appears. No boot occurs.

Example of the LLC2-SDLC Boot Menu

Figure 57 shows the LLC2-SDLC Boot menu.

```
Node:                    Address:            Date:        Time:
Menu: Boot                                                Path: (Main.7)

   Port
   Boot MUX Channel
   Table and Node Record
   Node (warm)
   Node (cold)
   SDLC Station
   Boot LLC-SDLC Conversion Station
   (reserved)
   Enable CPU card

   Node:                Address:            Date:          Time:
   Menu: Boot LLC-SDLC Conversion                          Path: (Main.7.
      Token Ring Station
      All Token Ring Stations
      Frame Relay Station
      All Frame Relay Stations
      Ethernet Station
      All Ethernet Stations

      Enter Selection:
```

Figure 57. LLC2-SDLC Boot Menu

SDLC-to-LLC2 Statistics

Introduction

This section describes how to generate statistics on Token Ring, Ethernet, and Frame Relay SDLC-to-LLC2 Conversion sessions.

Types of Statistics

You can generate these session statistics:

- LLC2 Conversion Station Summary Statistics
- LLC2 Conversion Detailed Station Statistics
- QLLC Station Summary Statistics
- Inbound and Outbound Call Processing Statistics

Follow These

Follow these steps to generate and reset statistics:

Step	Action	Result
1	Select **LLC to SDLC Statistics**. from the Status/statistics menu.	The LLC to SDLC Statistics menu appears.
2	Choose one of: • TR Station Summary • Frame Relay Station Summary • ETH Station Summary	The Station Summary screen appears.
	• TR Detailed Station Statistics • ETH Detailed Station Statistics • Frame Relay Detailed Station Statistics	The Entry Number: prompt appears.
	– Enter an entry number.	The Detailed Station Statistics screen appears.
	• TR Station Statistics Reset • ETH Station Statistics Reset • Frame Relay Station Statistics Reset	Resets the station statistics counters to zero.
3	Refer to sample statistics for more details.	

Station Summary Statistics

Example

Figure 58 shows the Station Summary statistic screens for Token Ring, Ethernet and Frame Relay SDLC-to-LLC2 conversion, followed by a description of screen terms.

```
Node:            Address:            Date:               Time:
LLC-SDLC Conversion Token Ring Station Summary           Path: 1 of 1


Stn.          State          MAC,SAP                    Link    Data frames
 No.  State   date/time       int/ext            RIF     down      in/out
====  =====   =============  ==================  ====    ====      =======
 1    up      11-AUG-1994  40-00-10-0-00-01,08  0000,0000,.   0    45
                16:49:36  40-00-00-0-00-00,04  NO RIF AVAIL       45
 2    disab   19-AUG-1994  40-00-00-0-00-01,04  NO RIF AVAIL   0    7
                09:02:00  40-00-00-0-00-00,03                     7
```

```
 Node:         Address:                   Date:               Time:
LLC-SDLC Conversion Ethernet Station Summary                   Page:  1 of
1

Stn.         State              MAC,SAP         Link   Data frames
No.  State  date/time           ext/int         down     in/out
===  ===== ===========  =====================  ======  ===========
  2   Down   3-JAN-1993  00-00-00-00-00-00,04    0            0
                4:57:46  08-00-3E-00-1B-64,04                 0
```

```
 Node:                Address:            Date:          Time:
LLC-SDLC Conversion Frame Relay Station Summary           Page: 1 of 1

Stn.         State         FRI      Link   Data frames
No.  State  date/time    stn. ID    down     in/out
===  ===== ===========  =========  ======  ===========
  1   Down   3-JAN-1993  FR-1S1        0             0
                4:57:27                               0
```

Figure 58. Station Summary Statistics

Descriptions

This table describes the screen attributes shown in Figure 58:

Term	Description
Stn. No.:	SDLC-to-LLC2 Conversion station number.
State:	Indicates current status. • Up: station is responding to polls. • Down: station is not responding to polls. • Disabled: port is disabled by user.
State date/time:	Date and time when state changed.
MAC, SAP, int/ext:	MAC addresses and internal and external SAP numbers of devices for Token Ring conversion.
RIF:	Routing information field used in all frames transmitted between the devices. This field contains the routing control field, ring number, and bridge number information.
Link down:	Number of times the link transitions from the UP state to the DOWN state.
FRI stn. ID:	Indicates the Frame Relay port and station numbers from the LSC station configuration.
Data Frames in/out:	Number of frames transmitted or received.

Detailed Station Statistics

Example

Figures 59 through 64 show examples of the Detailed Station Statistics screens for Token Ring, Ethernet, and Frame Relay, followed by descriptions of screen attributes.

Screen 1 of TR Detailed Session Statistics

Figures 59, 60, and 61, show screen 1 of the Detailed Station Statistics for Token Ring, Ethernet, and Frame Relay. There are four screens for the Detailed Station Statistics altogether. Screens 2 through 4, display the same screen attributes for Token Ring, Ethernet, or Frame Relay, as shown in Figures 62, 63, and 64.

```
Node:                    Address:            Date:          Time:
LLC-SDLC Conversion Detailed Station Statistics            Path: 1 of 4
Interface Type: Token Ring       Station Number: 1   Station Status:
Up

Token Ring Information:

      Trim card Burned-in MAC Address (BIA):  10-00-7L0C-78LA

      External MAC: 40-00-10-00-00-00         External SAP: 04
      Internal MAC: 40-00-10-00-00-01         Internal SAP: 08
      RIF: NO RIF AVAIL
Last Statistics Reset: 11-AUG-1994 16:49:36

Data Summary:
                IN           OUT                       IN
OUT
   Characters:  374          49       Characters/sec:  0            0
   Info Frames: 45           45       Info Frames/sec: 0            0
```

Figure 59. Token Ring Detailed Station Statistics - Screen 1

```
Node:                      Address:               Date:            Time:
LLC-SDLC Conversion Detailed Station Statistics                     Page: 1 of 4
 Interface Type: Ethernet        Station Number: 2     Station Status: Down

 Ethernet Information:

    ELAB card Burned-in MAC Address (BIA): 00-00-00-00-00-00

    External MAC: 00-00-00-00-00-00      External SAP: 04
    Internal MAC: 08-00-3E-00-1B-64      Internal SAP: 04

 Last Statistics Reset:  3-JAN-1993  4:57:27

 Data Summary:
                 IN         OUT                          IN         OUT
     Characters: 0          0            Characters/sec: 0          0
    Info Frames: 0          0           Info Frames/sec: 0          0
    Info Frames Queued:     0
```

Figure 60. Ethernet Detailed Station Statistics - Screen 1

```
 Node:                    Address:            Date:           Time:
 LLC-SDLC Conversion Frame Relay Station Detailed StatisticsPage: 1 of 4
 Interface Type: Frame Relay    Station Number: 1      Station Status: Down

 Frame Relay Information:

    Frame Relay Interface Port Number:        1
    Frame Relay Interface Station Number:     1
    Frame Relay Interface Connection Status:  Operational

 Last Statistics Reset: 19-SEP-1994 13:30:01

 Data Summary:
                 IN         OUT                          IN         OUT
     Characters: 0          0            Characters/sec: 0          0
    Info Frames: 0          0           Info Frames/sec: 0          0
    Info Frames Queued:     0
```

Figure 61. Frame Relay Detailed Station Statistics - Screen 1

Screen Terms

This table describes the screen attributes for Figures 59, 60, and 61:

Term	Description
Burned in MAC Address (BIA):	Burned in network address of the SDLC-to-LLC2 Conversion Token Ring card.
Locally Administered MAC Address (LAA):	Configured MAC address in the port record of the SDLC-to-LLC2 Conversion node.
External MAC:	MAC address of the LAN-attached PU device.
Internal MAC:	MAC address of the SDLC-to-LLC2 Conversion node.
RIF:	Routing information field used in all frames transmitted between the devices. This field contains the routing control field, ring number, and bridge number information.
Last Statistics Reset:	Last time statistics were reset.
Characters in/out:	Number of user data characters transmitted or received by the SDLC-to-LLC2 Conversion station from or to the locally attached LAN station.
Info Frames in/out:	Number of information frames received or transmitted by the SDLC-to-LLC2 Conversion station from or to the local device.
Info Frames Queued in/out:	Number of information frames queued to be sent outbound to the LAN or inbound to the WAN.
Characters per sec in/out:	Number of user data characters transmitted or received per second by the SDLC-to-LLC2 Conversion station from or to the locally attached LAN station.
Info Frames per sec in/out:	Number of information frames received or transmitted by the SDLC-to-LLC2 Conversion station from or to the local device.
Frame Relay Interface Port Number:	The port number of the Frame Relay port that this LSC-FR station is connected to.
Frame Relay Interface Station Number:	The station number of the Frame Relay station that this LSC-FR station is connected to.
Last Statistics Reset:	Last time statistics were reset.
Characters in/out:	Number of user data characters transmitted or received by the LSC station from/to the local Frame Relay port.
Info Frames:	Number of information frames queued to be sent outbound to Frame Relay port.
Info Frames Queued in/out:	Number of information frames queued to be sent outbound to the Frame Relay port or inbound to the WAN.

Term	Description *(continued)*
Characters/sec in/out:	Number of user data characters transmitted or received per second by the LSC station from/to the Frame Relay port.
Info Frames/sec in/out:	Number of information frames received or transmitted by the LSC station from or to the local Frame Relay Port.

Screen 2 of the Detailed Session Statistics

Figure 62 shows screen 2 of the Detailed Station statistics for Token Ring, Ethernet, or Frame Relay. This sample shows Frame Relay statistics, but the same screen attributes appear for Token Ring and Ethernet.

```
Node:                 Address:            Date:          Time:
LLC-SDLC Conversion Detailed Station Statistics         Page: 2 of 5
Interface Type: Token Ring      Station Number: 7     Station Status: Up

 LLC Protocol State: Link Opened, 13

 Control Frame Summary:

                  IN         OUT                            IN         OUT
             UA: 1          1                     SABME:  1          0
           TEST: 1          1                        RR:  11         11
            XID: 1          2                       RNR:  0          0
        XIDNull: 1          1                       REJ:  0          0
           XID0: 0          1                      DISC:  0          1
           XID1: 0          0                        DM:  0          0
           XID3: 0          0                      FRMR:  0          0

 Received Frame Error Summary:

      Bad Frames:       0                      Frames dropped:   0
      Out of Sequence:  0                     Packet Congestion: 0


 Press any key to continue ( ESC to exit ) ...
```

Figure 62. Detailed Station Statistics - Screen 2

Screen Terms

This table describes the screen attributes shown in Figure 62:

Term	Description
LLC2 Protocol state:	Indicates the current LLC2 Protocol State.
	Control Frame Summary
UA IN/OUT:	Number of UA frames responded to and received by this station.
TEST IN/OUT:	Number of test frames sent to and responses received for this SDLC-to-LLC2 Conversion station.
XID IN/OUT:	Number of XID frames received or transmitted by this device.
XIDNull IN/OUT XID0 IN/OUT XID1 IN/OUT XID3 IN/OUT	Eight XID statistics provide information useful in troubleshooting. These are in and out counters for null XIDs, and XIDs of formats 0, 1, and 3. If an XID frame enters the station, the appropriate in counters are incremented. If an XID frame exits the station, the appropriate out counters are incremented.
SABME IN/OUT:	Number of SABME frames received or transmitted by this device.
RR IN/OUT:	Number of RR frames received or transmitted by this device.
RNR IN/OUT:	Number of RNR frames received or transmitted by this device.
REJ IN/OUT:	Number of REJ frames received or transmitted by this device.
DISC IN/OUT:	Number of DISC frames received or transmitted by this device.
DM IN/OUT:	Number of DM frames received or transmitted by this device.
FRMR IN/OUT:	Number of FRMR frames received or transmitted by this device.
	Received Frame Error Summary
Bad Frames:	Bad frames received. These frames are improper for various reasons.
Out of Sequence:	Information frames received out of sequence.
Frames Dropped:	Frames dropped due to congestion (due to WAN receive queue full).
Packet Congestion:	Network performance degrades due to congestion. Frames are dropped when memory buffers are not able to store frames to be transmitted.

Screen 3 of the Detailed Station Statistics

Figure 63 shows screen 3 of the Detailed Session statistics.

```
Node:                 Address:            Date:           Time:
LLC-SDLC Conversion Detailed Station Statistics           Page: 3 of 5
Interface Type: Token Ring      Station Number: 7     Station Status: Up

 QLLC Link Address: FF       QLLC State: LINK_OPENED
 Negotiated DCP Level: FULL_DCP

 QLLC Packet Summary:

                  IN         OUT                           IN         OUT
            QSM:  0          1                      QRR:   0          0
            QUA:  1          0                      QDC:   0          0
            QRD:  0          0                      QDM:   0          0
          QFRMR:  0          0                    QTEST:   0          0
           QXID:  1          1



Press any key to continue ( ESC to exit ) ...
```

Figure 63. Detailed Station Statistics - Screen 3

Screen Terms

This table describes the screen attributes shown in Figure 63.

term	Description
QLLC Link Address:	Identifies the QLLC station address of the host.
QLLC State:	Identifies the QLLC protocol state. This statistic can be: • LINK OPENED • SUSPENDING • SUSPENDED • UNSUSPENDING
Negotiated DCP Level:	Identifies the DCP level configured between two stations. This value is always the lowest DCP level of the two stations. For example, if one station has the DCP Level set to CP_ONLY and is connected to a station having DCP configured as FULL_DCP, the Negotiated DCP Level is CP_ONLY. **Note** Individual port DCP statistics are described in the *Vanguard Configuration Basics Manual*.
QLLC Packet Summary	
QSM IN/OUT:	Qualified Set Mode packets received or transmitted by this SDLC-to-LLC2 Conversion station.
QUA IN/OUT:	Qualified Unnumbered Acknowledgments packets received or transmitted by this SDLC-to-LLC2 Conversion station.
QRD IN/OUT:	QRD frames received or transmitted by this SDLC-to-LLC2 Conversion station.
QFRMR IN/OUT:	Qualified Frame Rejects received or transmitted by this SDLC-to-LLC2 Conversion station.
QXID IN/OUT:	Qualified XID frames received or transmitted by this SDLC-to-LLC2 Conversion station.
QRR IN/OUT:	Qualified Receiver Ready frames received or transmitted by this SDLC-to-LLC2 Conversion station.
QDC IN/OUT:	QDC frames received or transmitted by this SDLC-to-LLC2 Conversion station.
QDM IN/OUT:	Qualified Disconnect Mode received or transmitted by this SDLC-to-LLC2 Conversion station.
QTEST IN/OUT:	Qualified Test frames received or transmitted by this SDLC-to-LLC2 Conversion station.

Screen 4 of the Detailed Station Statistics

Figure 64 shows screen 4 of the Detailed Station statistics.

```
Node:                Address:            Date:           Time:
LLC-SDLC Conversion Detailed Station Statistics        Path: 4 of 4
Interface Type: Frame Relay      Station Number: 1   Station Status: Up



Time until next autocall attempt: 0          Call Status:Disconnected
Number of autocall attempts:1

Call Summary:
                IN           OUT                       IN           OUT
Call Requests:  0            3        Call Accepts:    3            0
Clear Requests: 0            2        Clear Confirms:  2            0

Last Call: Outbound
      Called Address: 2000301
      Calling Address:
      Facilities: 3F01
      CUD: C3000000

Last Clear: Outbound
      Cause: 9-Called Number Out of Order
      Diagnostic: 113-Unknown Diagnostic Code

Press any key to continue (ESC to exit)...
```

Figure 64. Detailed Station Statistics - Screen 4

Screen Terms

This table describes the screen attributes shown in Figure 64:

Term	Description
Call Status:	Indicates autocall status. Status is Connected or Disconnected.
Time until next autocall attempt:	Indicates the number of seconds between elapsed autocall attempts for this SDLC-to-LLC2 Conversion station.
Number of autocall attempts:	How many times this station tried to place an autocall.
Time until link suspended	Specifies the current value of the Dial on Demand Link Idle Timer.
Call Summary	
Call Requests IN/OUT:	How many autocall requests sent to this station or responded to by this station.
Clear Requests IN/OUT:	Number of incoming or outgoing clear request packets.
Call Accepts IN/OUT:	Number of incoming or outgoing calls accepted.
Clear Confirms IN/OUT:	Number of incoming and outgoing clear confirmed packets.
Last Call:	Identifies last call as inbound or outbound.
Called Address:	The address that was called in the last inbound or outbound call.
Calling Address:	The address of the device that placed the last inbound or outbound call.
Facilities:	The facility field of the last inbound or outbound call.
CUD:	Call User Data field of the last inbound or outbound call.
Last Clear:	Identifies the direction of the last clear request packet as inbound or outbound.
Cause/diagnostic:	Cause and diagnostic field of the last clear request packet.

Data Connection/Protection (DCP) Statistics

Introduction

Data and Connection Protection statistics for any type of port or station are described on an individual port or station basis in the *Vanguard Configuration Basics Manual*, Part Number T0113.

■Note

The channel identifier string for an SDLC-to-LLC2 station is the same as the one used in the Route Selection Table (for example, LSC followed by TR1, ETH31s1, etc.)

Managing SDLC-to-LLC2 Conversion Configurations

Introduction

This section describes routine configuration management tasks you can perform with SDLC-to-LLC2 Conversion.

Tasks

You can perform these tasks:

- Examine configurations
- List configurations
- Copy configurations
- Print configurations
- Enable/Disable Frame Relay Stations

See the following sections for details on these tasks.

Examining Configurations

How to...

Follow these steps to examine SDLC-to-LLC2 Conversion configuration tables:

Step	Action:	Result:
1	Select **Examine LLC to SDLC Record**. from Examine menu.	The LLC to SDLC Record menu appears.
2	Choose the table you want to view: • LLC Profile Table • Token Ring Station Table • Ethernet Station Table • Frame Relay Station Table	Entry Number: prompt appears.
3	Type in the entry number of the table you want to examine.	Depending on your selection, the Examine LLC Profile Table screen appears (see Figure 55). Or: The Examine Station Table screen appears (see Figure 65).

Example

Figure 65 shows configuration parameters currently selected for the LLC-SDLC Profile table.

```
                Examine LLC-SDLC Conversion Profile Table


        Entry Number: 1/
        [1]  LLC profile name: DEFAULT/
        [1]  T1 reply timer: 1/
        [1]  T2 Rx ack timer: 1/
        [1]  Ti inactivity timer: 30/
        [1]  N2 Retry count: 8/
        [1]  N3 Ack delay count: 3/
        [1]  Tx window size: 7/
```

Figure 65. Examine Profile Table

Listing Configurations

How to...

Follow these steps to list SDLC-to-LLC2 configurations:

Step	Action:	Result:
1	Select **LLC to SDLC Records** from the List menu.	The LLC to SDLC Records menu appears.
2	Choose the table you want to list: • LLC Profile Table • Token Ring Station Table • Ethernet Station Table • Frame Relay Station Table	 Lists the LLC Profile Table (see Figure 66). Lists the Station Table (see Figure 67).

Example

This screen lists the current configuration parameters of all the LLC-SDLC Profile tables configured for this station (see Figure 66).

```
#Enter Selection: 2

LLC-SDLC Conversion Token Ring Station Table List

[1] 40:00:00:00:00:01,04,04,4,OFF,Default,01,NONE,
     (blank),(blank),(blank),c3000000,(blank),
     --,--,--,--,--,--,--,--,OFF,MED

[2] 40:00:00:00:00:01,04,04,4,OFF,Default,01,NONE,
     (blank),(blank),(blank),c3000000,(blank),
     --,--,--,--,--,--,--,--,OFF,MED

Press any key to continue (ESC to exit)...
```

Figure 66. List Profile Table Example

List Table Example

This table lists the current configuration parameters for all the LLC-SDLC Station tables (see Figure 67).

```
#Enter Selection: 1

LLC-SDLC Conversion Profile Table List

[1] Default, 3,3,30,8,3,7

[2] Default, 3,3,30,8,3,7

[3] Default, 3,3,30,8,3,7

[4] Default, 3,3,30,8,3,7

Press any key to continue (ESC to exit)...
```

Figure 67. List Station Table Example

Copying SDLC-to-LLC2 Conversion Configurations

How to...

Follow these steps to copy SDLC-to-LLC2 Conversion configurations:

Step	*Action:*	*Result:*
1	Select **Copy LLC to SDLC Record** from Copy/Insert record menu.	The LLC to SDLC Record Copy menu appears.
2	Select the table you want to copy: • LLC Profile Table • Token Ring Station Table • Ethernet Station Table • Frame Relay Station Table	 This prompt appears: From Profile record number: This prompt appears: From Station record number:
3	Type in the number of the Profile record you want to copy and press Return. Or: Type in the number of the Station record you want to copy and press Return.	This prompt appears: To Profile record number: This prompt appears: To Station record number:
4	Type in the number of the Profile record you want to copy to. Or: Type in the number of the Station record you want to copy to.	This message appears: **Storing Updated Record in Configuration Memory**

Printing Configurations

How to...

Follow these steps to print SDLC-to-LLC configurations:

Step	*Action:*	*Result:*
1	Choose **Select Record Types** from the Print Configuration menu.	The Record Types menu appears.
2	Choose one of the following: • LLC-SDLC TR Station table • LLC-SDLC Profile Table	Select Record types: prompt appears.
3	Enter the menu number(s) of the records you want to print. Separate each record number with a + sign. For example: 3+4+5 Then: Press Return.	The Record Types menu appears. An asterisk appears next to the menu numbers of the records you selected.
4	Press Escape once.	The Record Types menu appears.
5	Choose Print Selected Records.	The selected records print out at the configured printer.

Index

A

Applications
- SDLC to LLC 71

Autocall
- Autocall Mnemonic 41
- outgoing calls 30

Autolearn
- example 9
- SDLC to LLC stations 9, 74

B

Booting
- SDLC to LLC
  - LLC-SDLC stations 112

Broadcast XID
- effect on SDLC TPAD port functions 19
- how to implement 19
- requirements 19

C

Call Establishment
- call clear 31
- description 30

Canonical Format
- description 69

Compatibility
- IBM SNA/SDLC 5

Configuration
- Hunt Group 24
- SAK 4
- SDLC station record 39

Copy
- SDLC to LLC
  - configurations 131

E

Ethernet
- conversion station support 67
- Dual Ethernet LANs
  - SDLC traffic conversion 67

Examine
- SDLC to LLC
  - Token Ring Profile Table 128
  - Token Ring Station Table 128

Examples
- Reverse Conversion 89, 91
- RFC 1490
  - single-box solution 77
- SDLC to LLC
  - configuring 72

H

Hunt Group Conversion
- Direct Calls to SLAC Stations 24
- How it Works 23
- Hunt Group Type 24
- New Parameters 24
- Steps to Configure Hunt Group 24
- XIDs 25

I

IBM
- related documentation 3

Interoperability
- SDLC to LLC 69

L

Limitations
- SDLC to LLC 69

LLC-SDLC Token Ring Station
- parameters 97

P

Parameters
- SDLC to LLC
  - LLC-SDLC Profile Table 93
  - LLC-SDLC Token Ring Station 97

Polling
- call establishment 30
- local SDLC 5, 18
- Poll Frequency Period 37
- Poll Timer 37

Port parameters
- Clock Source 36
- Number of Controllers 36
- Poll Frequency Period 37
- Poll Timer 37
- Port Address 38
- Port Control 34
- Port Number 34
- Port Type 34
- SDLC Port Options 38
- Subtype 34
- Transmission Encoding 35
- Tries 37
- Type of Line 35

Protocol ID 41

PU
- PU2.1/XID3 restrictions 6
- PU2.1/XID3 support 6
- Type 1 device 18
- Type 2 device 5, 18
- Type 2.1 device 5

R

Related documentation 4
Reverse Conversion
    critical parameters 91
    how it works 89
RFC 1490
    advantages 68
RFC1490 20
    application example 21
    configuration 22

S

SAK
    configuration 4
SDLC Operation
    call establishment 30
SDLC to LLC
    advantages 68
    Autolearn 9, 74
        example 9
    booting stations 112
    examples 76, 92
    how SLAC works 70
    interoperability 69
    limitations 69
    LLC Profile Table
        parameters 93
    SNMP manageability 69
    typical applications 71
    What is it? 8, 66
SNA Dial on Demand 12
SNA/SDLC Option
    features 5
    hardware 18
    operation capabilities 3
    remote devices supported 18
SNMP
    SDLC to LLC 69
Station parameters
    Autocall Mnemonic 41
    Billing Records 43
    CUG Membership 42
    K Frame Window 41
    Port Number 40
    Protocol ID 41
    QLLC Options 42
    Station Address 40
    Station Number 40
    Station Subaddress 43
    XID 42
Station Summary
    SDLC to LLC 115
Statistics
    Call Summary 57
    description 48
    Detailed Link 52
    Detailed SDLC Port 49
    SDLC to LLC
        Detailed Station 117
        Station Summary 115
        types 114
Synchronous device support 18
System Network Architecture/Synchronous Data
        Link Control (see SNA/SDLC Option)

X

X.25
    connection 7
    description 7
    packet description 7
XDLC Data/Connection Protection 17
XIDs
    Hunt Group 25