Vanguard Managed Solutions

Understanding Voice Technology - Vanguard Technical Reference

Notice

575 West Street
Mansfield, Massachusetts 02048
(508) 261-4000

Printed in U.S.A.

Restricted Rights Notification for U.S. Government Users

The software (including firmware) addressed in this manual is provided to the U.S. Government under agreement which grants the government the minimum “restricted rights” in the software, as defined in the Federal Acquisition Regulation (FAR) or the Defense Federal Acquisition Regulation Supplement (DFARS), whichever is applicable.

If the software is procured for use by the Department of Defense, the following legend applies:

Restricted Rights Legend

Use, duplication, or disclosure by the Government
is subject to restrictions as set forth in
subparagraph (c)(1)(ii) of the
Rights in Technical Data and Computer Software
clause at DFARS 252.227-7013.

If the software is procured for use by any U.S. Government entity other than the Department of Defense, the following notice applies:

Notice

Notwithstanding any other lease or license agreement that may pertain to, or accompany the delivery of, this computer software, the rights of the Government regarding its use, reproduction, and disclosure are as set forth in FAR 52.227-19(C).

Proprietary Material

Part No. T0104-04, Rev G
Publication Code: DS
First Printing: August 1999

Manual is current for Release 6.3 of Vanguard Applications Ware.

To comment on this manual, please send e-mail to LGEN031@vanguardms.com

Contents

Understanding Voice Technology - Vanguard Technical Reference

About this Book

Chapter 1. Understanding the Phone System

Chapter 2. Digital Voice

Contents (continued)

Chapter 2. Digital Voice (Continued)

Chapter 3. Voice over Frame Relay and Voice Over IP

Chapter 4. Vanguard Voice Solution

Index

About this Book

Introduction

Welcome to the world of voice technology. This Voice Technology Reference Guide is designed for the network professional who is curious about voice technology and wants to learn how a telephone call is made, what are the components of a telephone system, how voice and data are integrated, voice telephony implementation, and much more.

What is in this Book?

Chapter 1, Understanding the Telephone System, starts with the basics, how a telephone call is made. This chapter describes some of the physical and logical components of the telephone system required for a telephone call to occur: the PBX, switch, telephone, trunk, subscriber, line, tie line, and Central Office (CO). Next, it examines the different types of signaling exchanged between the components of the telephone system, also known as the Public Switched Telephone Network, PSTN.

Chapter 2, Digital Voice, describes how analog voice (speech) is converted into digital voice (0s and 1s bits). You will learn how speech is sampled and converted into digital bits in a process known as voice coding. After analog voice is converted to digital voice it will be transported over similar telephone system components discussed in Chapter 1. Chapter 2 also introduces digital T1 and E1 trunk lines and describes how channel banks provide the interface between the analog PBX and the digital world. Lastly, the chapter briefly examines how digital telephone components communicate by digital signaling.

Chapter 3, Packetized Voice: Voice over IP and Voice over Frame Relay. The demand for lower cost data and voice solutions for corporate enterprise networks and the rapid growth of the Internet, have propelled the emergence of packetized voice solutions, Voice over IP and Voice over Frame Relay. This chapter covers the basic technologies, the advantages and disadvantages, and the challenges of implementing Voice over IP and Voice over Frame Relay networks. This chapter also describes H.323 standard Voice over IP implementation.

For More Information

For more information on Vanguard Managed Solutions products, training and services, visit this website:

http://www.vanguardms.com

Customer Response Card

Vanguard Managed Solutions would like your help in improving its product documentation. Please complete and return this card by fax to (508) 339-9592; Attention: Product Documentation, to provide your feedback.

To discuss comments with a member of the documentation group, provide telephone information at the bottom of this page. **Thank you** for your help.

Name _____

Company Name _____

Address _____

_____

_____

Document Title: Understanding Voice Technology - Vanguard Technical Reference

Part Number: **T0104-04, Revision G**

Please rate this document for usability:

☐ Excellent ☐ Good ☐ Average ☐ Below Average ☐ Poor

What did you like about the document? _____

_____

_____

_____

_____

What information, if any, is missing from the document? _____

_____

_____

_____

_____

Please identify any sections/concepts that are unclear or explained inadequately.

_____

_____

_____

_____

Additional comments/suggestions. _____

_____

_____

_____

_____

Telephone _____ Ext. _____ Best time to call_____

Cut Here

Chapter 1
Understanding the Phone System

Overview

Making a Phone Call

What do you do to make a phone call? You pick up the phone, dial some digits, wait for the person you called to pick up their ringing phone, and then you begin your conversation. To most phone users the details and intricacies of how the phone call occurs are transparent. We have a simplistic view of our phone connection as:

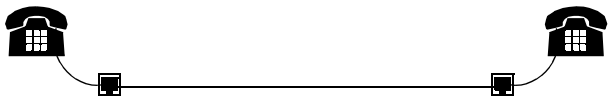

Figure 1-1. Simplistic View of a Phone Call

What is beyond the phone and the phone outlet in the wall, are a vast number of intermediate devices that must exist to make our phone conversation occur. Typically, our phone system looks more like this:

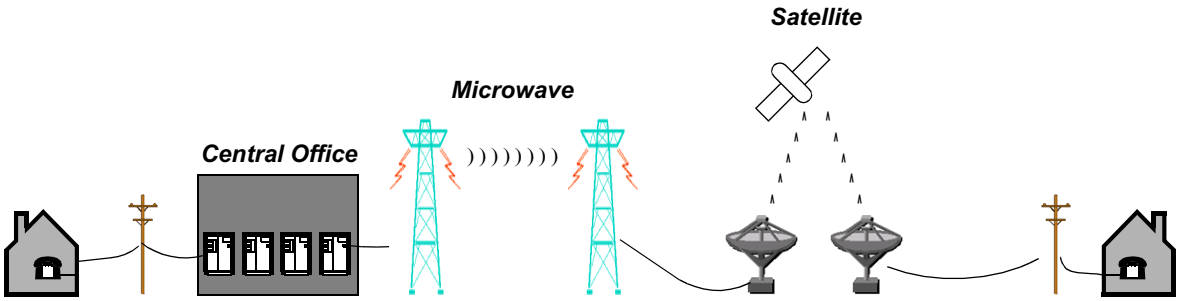

Figure 1-2. Phone Connections

A complex network of local, national, and international phone companies and carriers may provide the intermediate devices that handle our phone connection.

To keep matters simple, we will start with the basics and focus on phone communications in a private, corporate office environment. We will look at two devices that are common in our office phone system, the phone, and the Private Branch Exchange (PBX). In this chapter, you will learn:

- How a phone call is made.
- The basic analog phone system components - phones, PBX, trunks, lines, switches.
- How phone system components communicate with each other using signaling.

Anatomy of a Local Office Phone Call

Overview

Let us start by examining a local phone call between two corporate phone users, Mr. Jones and Mrs. Smith. Figure 1-3 illustrates two phones each with a four-digit phone extension number, 7105 and 7201. Each phone connects to the phone outlet in the wall using a phone cable. The phone outlet connects to a Private Branch Exchange, PBX, using another cable or wire.

For simplicity, we can imagine that the phone connects directly to the PBX with a dedicated pair of wires. This pair of wires is called the *subscriber* or *local loop.* One wire is called the *Tip* and the other wire, the *Ring*. We will return to the subscriber loop, Tip and Ring in a later section.

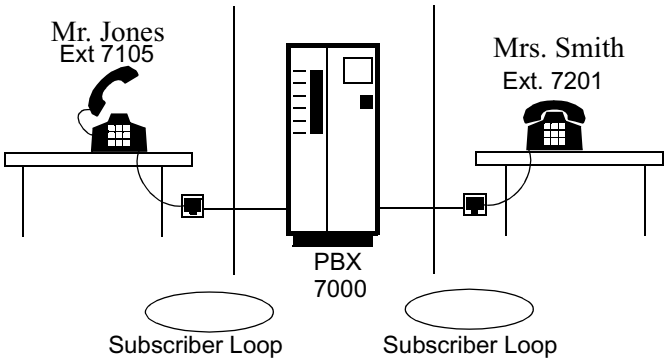

Figure 1-3. Example of Two phone Extensions Connected to a PBX

How a Phone Call is Made

Let us see what happens when Mr. Jones picks up his phone to call Mrs. Smith.

	How A Phone Call is Made
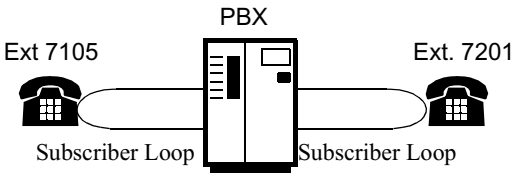	**Onhook** Before Mr. Jones or Mrs. Smith picks up their phone, both phones are *onhook*, which means that the phone handset is not lifted off the phone. The PBX provides power and potential across each subscriber loop to monitor the activity and power of each phone. When the phone is *onhook*, there is no current flow through the subscriber loop.
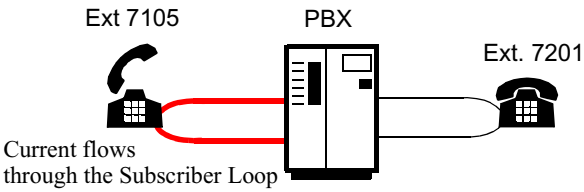	**Offhook** When Mr. Jones lifts the phone handset, the phone is now *offhook*. A switch hook within the phone closes and current flows through the subscriber loop. The current flow tells the PBX that Mr. Jones wishes to place a call.

	How A Phone Call is Made
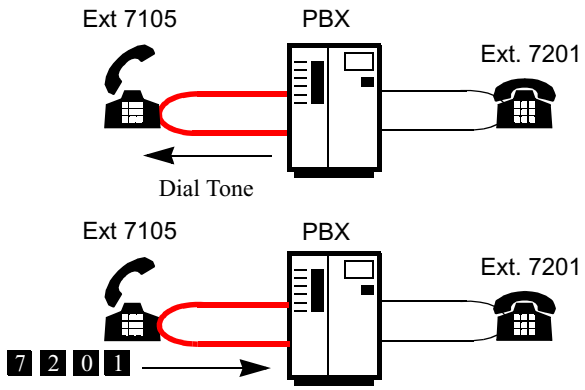	**Dial Tone** At this point, the PBX: • searches for an unused dial register to store the dialed phone number digits. • sends a dial tone through the subscriber loop to Mr. Jones' phone. Once Mr. Jones hears the dial tone he can begin to dials the digits, 7201. These digits are sent over the subscriber loop to the PBX dial register.
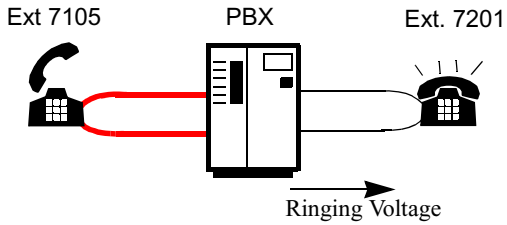	**Ringing Voltage** The PBX looks in its routing table and recognizes that extension 7201 is a local number and exist on another subscriber loop. The PBX sends a ringing voltage across the subscriber loop to ring the bell within 7201 phone.
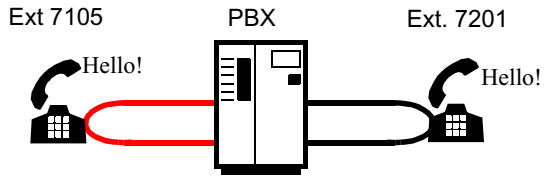	**Call Completion** Once Mrs. Smith lifts up the phone handset, current flows through the subscriber loop and the circuit is complete for the call. Mr. Jones and Mrs. Smith can begin talking and their speech is carried over the subscriber loop as an electric signal.

You have just learned a little bit about how a phone call is made in a corporate office environment. We have briefly mentioned some terms such as switch hook, dial tone, dial register, and ringing voltage. In the next section, we will look into how these components and functionalities exist in the phone and PBX.

Components of the Phone System

Introduction

In this section, we examine in more detail the properties and functions of:

- the phone
- the PBX
- the subscriber loop
- the trunk lines

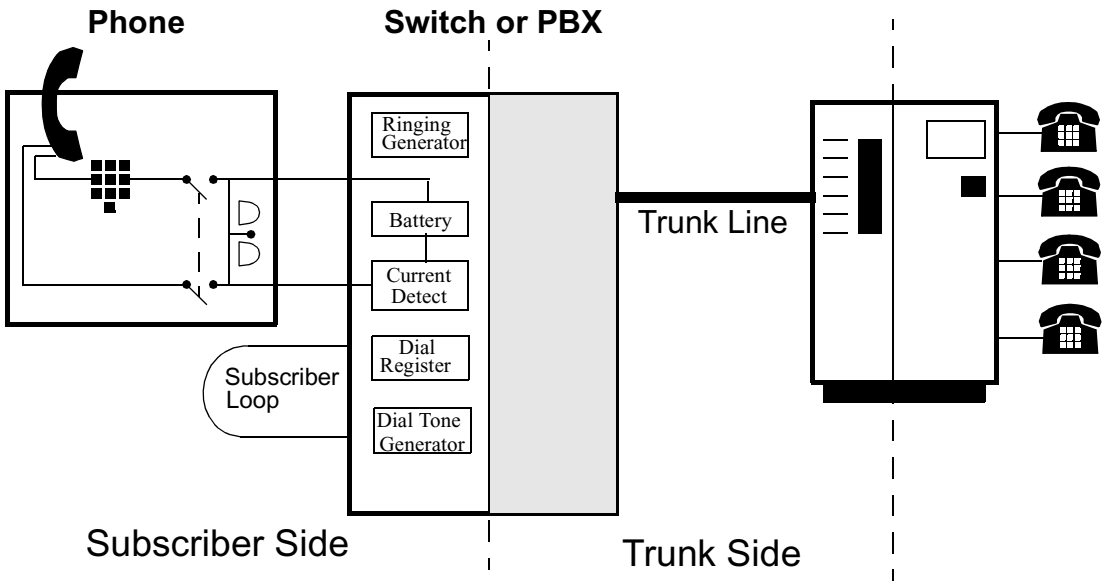

Figure 1-4. Phone System

Phone

Components of a Phone

The phone is an analog device that carries our speech as an electric signal (We'll look at how our voice is carried as an electric signal in Chapter 2). To make this occur, all phones have the basic components shown in Figure 1-5.

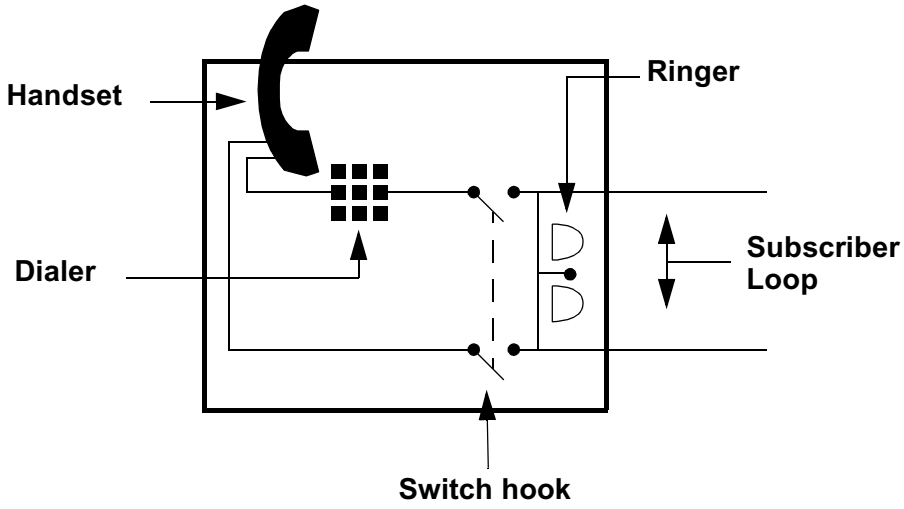

Figure 1-5. Phone Components

Handset

The handset contains a receiver, transmitter, and hybrid.

Receiver and Transmitter

The handset houses the earpiece or receiver and the mouthpiece or transmitter. We speak into the mouthpiece and our speech is transmitted over a pair of wires. We listen through the earpiece or receiver and receive sound over another pair of wires. In total, four wires make up the handset.

Hybrid

The handset also contains a device known as the hybrid. As we learned earlier, the phone connects to the PBX using a dedicated pair of wires, the subscriber loop. The phone receiver/transmitter, however, has four wires. In order to interface between the receiver/transmitter that has four wires and the PBX which uses two-wire, a hybrid is needed. Figure 1-6 illustrates an example of a hybrid.

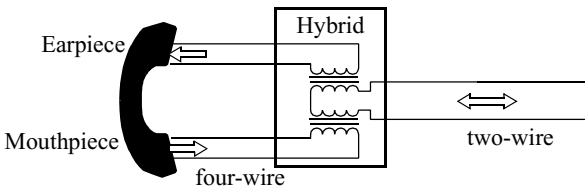

Figure 1-6. 4-Wire to 2-Wire Converter- Hybrid

Sidetone

Sidetone is an intentional by-product of a phone's hybrid. A portion of the speech is allowed to "bleed" into the earpiece so you can judge how loudly you are talking.

Switch Hook

The switch hook is located directly below the handset.

When you lift the handset, the switch hook closes and current flows through the phone. The phone is *offhook*. The PBX supplies power to operate the phone.

When you replace the handset, the switch hook opens and current ceases to flow through the phone. The phone is *onhook*.

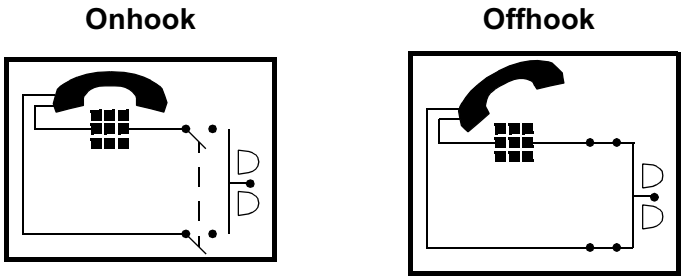

Figure 1-7. Onhook and Offhook Switch Hook

Rotary and Pushbutton Dialer

The dialer is what you use to enter in the phone number you wish to call. In rotary dialing, you spin the dial to send a digit. For pushbutton phones, you press buttons which generate a unique combination of tone (called DTMF) to represents each digit.

Ringer

When a PBX wants to alert a remote phone of an inbound call, it rings the remote phone by sending ringing voltage down the subscriber loop. The ringing voltage causes an armature within the phone to pivot. The armature in turn drives a hammer against a bell, which causes ringing.

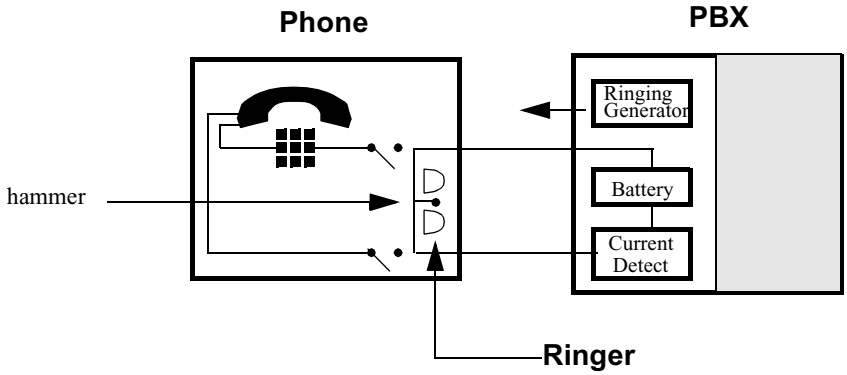

Figure 1-8. Ringer

PBX

What is a PBX?

The Private Branch Exchange (PBX) or switch provides many functions. It interfaces with phones and provides power to operate and ring the phone. It also interfaces with other PBXs or to other devices. The interface with the phone is called *subscriber* side and the interface with PBXs is called the *trunk* side. Figure 1-9 and the table below describes some of the PBX components.

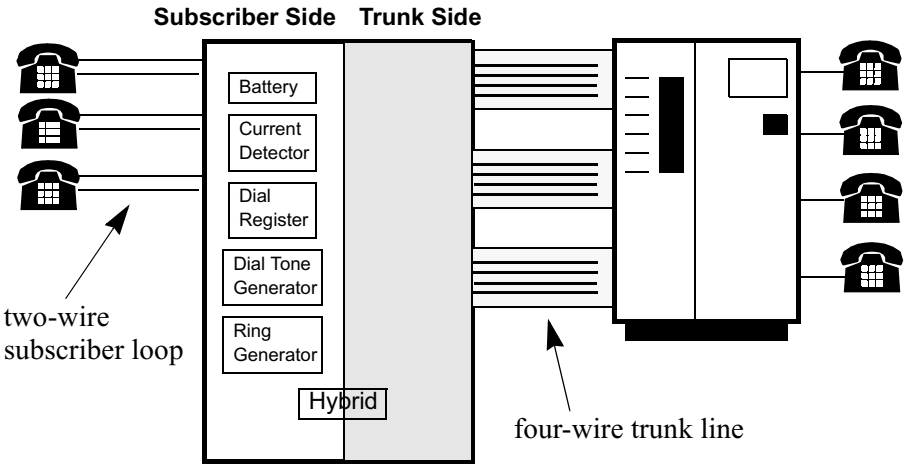

Figure 1-9. Components of a PBX

PBX Component	Functions
Battery	Powers the circuit and the phone.
Current Detector	Monitors the status of the subscriber loop and trunk. The PBX current detector detects changes in the circuit. When: • The handset is in the cradle or onhook, no current flows through the circuit. • The handset is raised or offhook current flows in the circuit.
Dial Register	The Dial Register is where the PBX receives and stores dialed digits that is receives from the phone.
Dial Tone Generator	Generates a dial tone to acknowledge the request for service once the dial register is ready. This indicates to the phone user, that he or she can begin dialling the phone number.

PBX Component	Functions
Ring Generator	The ring generator provides a number of functions: • It detects a call for a specific subscriber and alerts the called party by applying ringing voltage on the subscriber's local loop. • The ringing voltage rings the ringer in the remote phone until either the caller hangs up or the called party picks up the phone.
Hybrid	The PBX also contains a hybrid. This hybrid is different from the one that exist in a phone handset in that it converts the two-wire subscriber loop into a four-wire interface. Most high volume, long distance trunk lines operate with four wires so a conversion from two-wire to four-wire is needed.

Subscriber Loop

What is a Subscriber Loop?

As mentioned earlier, the subscriber loop is a dedicated pair of wires that connect the phone to the PBX. Each phone connected to the PBX has its own subscriber loop.

Tip and Ring

The subscriber loop consists of two wires known as, *Tip* and *Ring*. As shown in Figure 1-10, the *Ring* lead connects to the negative side of the battery; the *Tip* lead connects to ground. When the circuit is complete, current flows. The current flow is shown by the dashed loop.

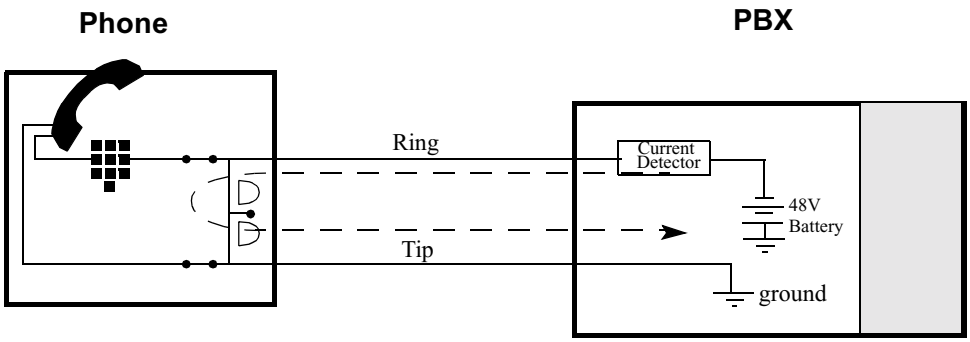

Figure 1-10. Subscriber Loop

Trunk Line

What are Trunk Lines?

Trunk lines connect one PBX to another PBX, or a trunk line can connect the PBX to the outside world, the public phone network.

There can be many trunk lines between two PBXs and these trunk lines are usually shared. The number of trunk lines available will depend on the number of phones connected to each PBX. Trunk lines are shared because it is assumed that the phone users will not all simultaneously try to make a call at the same time. This means that when a call is made, the PBX seizes and uses one trunk line. Upon completion of the call, the PBX releases the trunk line and it is available for use by another call.

Two-Wire or Four-Wire Trunk Lines

There are two types of trunk lines, two-wire and four-wire.

Two-wire Circuits

Two-wire trunk lines are usually used to connect PBXs at distances of up to several thousand feet. The exact distance between two PBXs will depend on the thickness or gauge of the wire used. The thicker the gauge, the longer the distance. However, as distance increases the signal quality decreases until the receiver cannot recognize the signal. In this situation, amplifiers are needed to amplify the signal. Since amplifiers work in only one direction, the voice is separated into different paths: one for transmit and one for receive.

Four-Wire Circuits

Four wire trunk lines are used for most high-volume, long distance lines. A four-wire phone line circuit uses two wires for the transmit path and two wires for the receive path. Voice and signals are transmitted on the Tip and Ring and received on the Tip1 and Ring1.

If a PBX connects to a four-wire circuit, a hybrid is needed. The phone connects to the PBX over the two-wire subscriber loop and in order to interface with the four-wire trunk line, the PBX uses a hybrid to provide the conversion as shown in Figure 1-11.

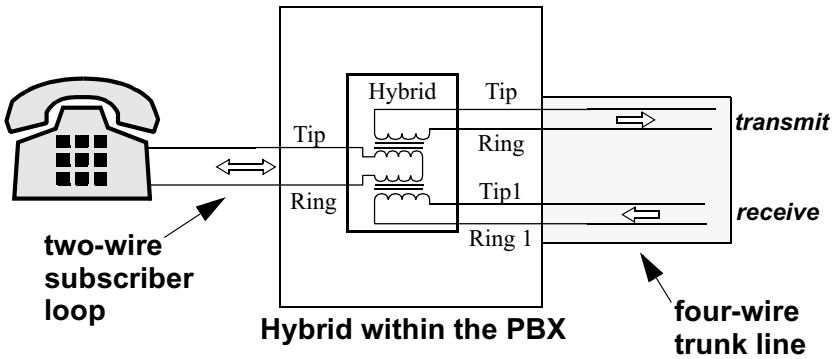

Figure 1-11. Using a Hybrid to Convert from a Two-Wire Subscriber Loop to a Four-Wire Trunk Line

Echo

If there is a good impedance match between the two-wire and four-wire lines, the hybrid is said to be balanced and little or no energy is reflected. If the hybrid is inadequately balanced and a portion of the transmitted voice is reflected back, this causes echo. There can be two types of echo: talker and listener echo. If you are talking and you hear your speech repeated, this is talker's echo. If you are listening and you hear the speaker's speech repeated, this is listener's echo.

Most PBX or switches will have mechanisms to suppress or cancel echo.

Types of Trunk Lines

There are many types of trunk lines. Some can support one way or two way calling, while other trunk lines connect private switches or connect private and public networks. Some of the common trunk lines are:

Tie Trunks

Tie trunks connect one PBX to another PBX. Tie trunk are either two-wire or four-wire.

Central Office (CO) Trunk

A CO trunk connects the PBX to a local Central Office (CO). The local CO is part of the local phone company. This type of trunk line allows calls to go from a private network to a public network.

Foreign Exchange Station (FXS) Trunk

A typical FXS trunk consists of a subscriber trunk connected directly to a distant CO or a PBX. This service can be leased to avoid long distance charges to a distant CO. The subscriber dials a local exchange number. FXS trunks provide the convenience of a seven-digit number plus service to a distant location at a reduced cost.

Direct Inward Dialing (DID)

Direct Inward Dialing (DID) trunks allow a caller to dial into a PBX directly to a phone or a group of phones without operator intervention. DID typically uses two-wire trunks.

In DID, an outside caller dials the number of the desired phone extension, which the connecting CO passes to the PBX.

Direct Outward Dialing (DOD)

With DOD, the extension phone user automatically accesses the local CO without operator intervention. You typically dial "9" and then the outside number.

Wide Area Phone Services (WATS)

Inward WATS and Outward WATS let users either receive or originate long distance calls and have them billed at a bulk rate rather than individually. Inward WATS calls are billed to the called number; outward WATS are billed to the calling party.

Remote Phone Call

Introduction

In the previous sections, you have learned how a phone call is made between two phone extensions connected to the same PBX. You have also learned about the various components of the phone and PBX that actually make the phone call happen. In this section, we will go a step further to describe how a phone call is made between phones connected by two PBXs. This is called a remote call.

Calling an Extension on Another PBX

To see how a remote call works, we will revisit the office of Mr. Jones and Mrs. Smith. Mr. Jones and Mrs. Smith, can also call Mrs. Lewis at extension 5001 and Mr. Clark at extension 5003. However, in this example, Mrs. Lewis and Mr. Clark's phones are connected to another PBX. The two PBXs, PBX 7000 and PBX 5000, are connected to each other by trunk lines as shown in Figure 1-12.

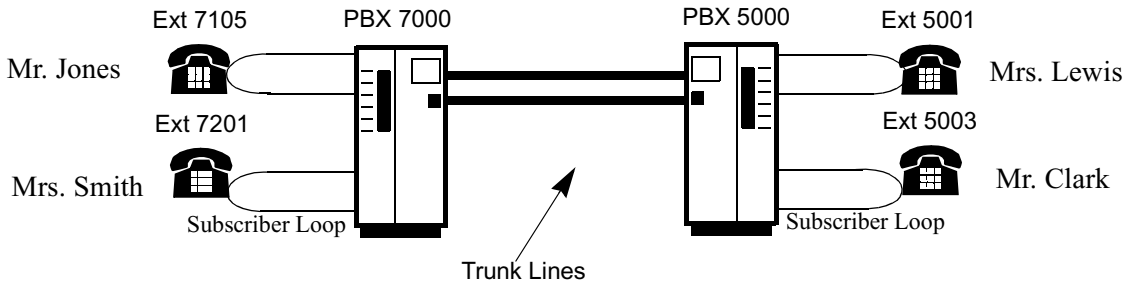

Figure 1-12. Example - Remote Phone Call

Remote Phone Call Process

Now let us see what happens when Mr. Jones picks up his phone handset to call Mr. Clark at extension 5003.

	How A Phone Call is Made
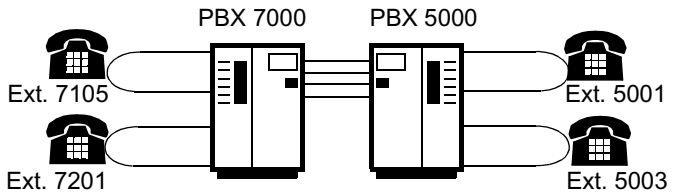	**Onhook** Initially all phones are *onhook* and there is no current flow through any subscriber loop.
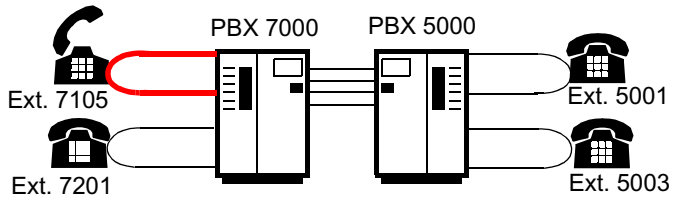	**Offhook** When Mr. Jones lifts up the phone handset, the phone is now *offhook*. The switch hook within the phone closes and current flows through the subscriber loop. The current flow tells the PBX that Mr. Jones wishes to place a call.
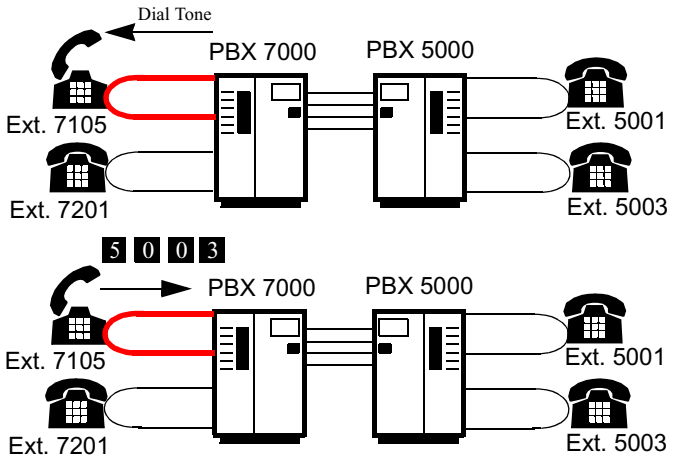	**Dial Tone** At this point, the PBX: • searches for an unused dial register to store the dialed phone number digits. • sends a dial tone through the subscriber loop to Mr. Jones' phone. Once Mr. Jones hears the dial tone he can begin to dials the digits, 5003. These digits are sent over the subscriber loop to the PBX dial register.
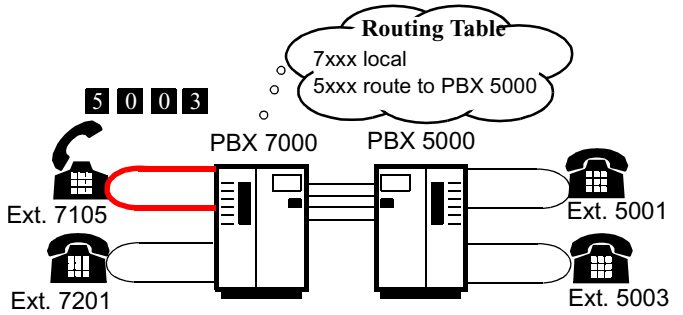	**Checking the Routing Table** The dialed digits stored in the PBX dial register are compared against an internal routing table. The routing table can be a list of numbers that the PBX can route or establish a call to. PBX 7000 determines that dialed number belongs to PBX 5000 and the call to 5003 must be served by PBX 5000.

	How A Phone Call is Made
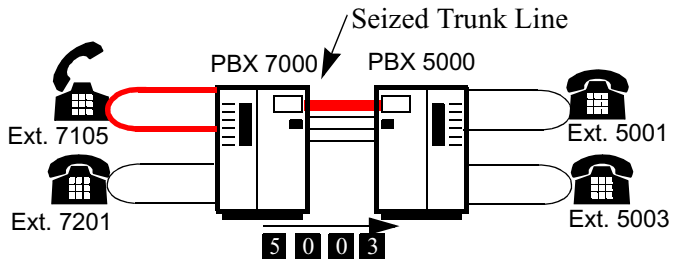	**Seizing the Trunk** PBX 7000 seizes the first available tie trunk line and this trunk line becomes the dedicated path to PBX 5000 for the duration of the call. PBX 7000 sends a request for service to PBX 500. If PBX 5000 is ready, it will acknowledge the request. Now PBX 7000 then forwards the dialled digits, 5003, to PBX 5000.
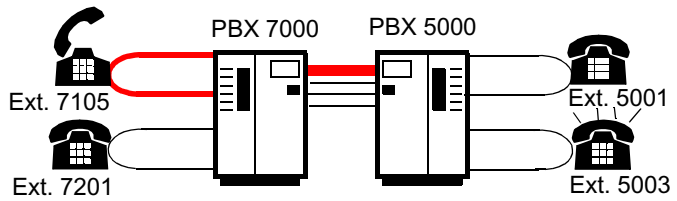	**Ringing Voltage** PBX 5000 recognizes that the extension 5003 exist on one of its subscriber loop and it sends a ringing voltage across the subscriber loop to ring the bell within 5003 phone.
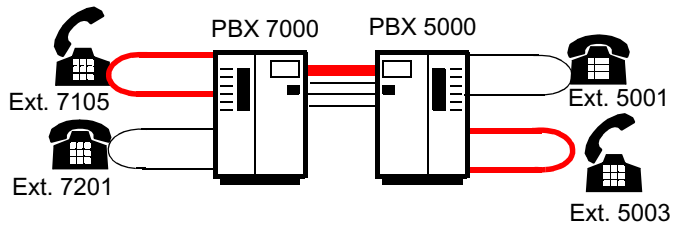	**Call Completion** Once Mr. Clark lifts up the phone handset, current flows through the subscriber loop and the circuit is complete for the call. Mr. Jones and Mr. Clark can begin talking and their speech is carried over the subscriber loop as an electric signal.

The main difference between the local phone call and the remote phone call we have just examined, is the use of the trunk line between the two PBXs. In both examples, the PBXs have a routing table where it stores a list or address book of numbers that the PBX can route calls to.

Signaling

Introduction

Now that you are familiar with how a phone call is made and understand the components of a phone system, we examine how the phone and PBX interact through *signaling.* Signaling is important because it is how phone system components communicate and exchange information. For example, we had mentioned in the remote phone call example that after a PBX seizes the trunk, it sends a setup request message to the other PBX. This is one example of signaling. Another example of signaling is the dial tone that we hear when we pick up the phone. This is a signal to the phone and the user that the PBX is ready to receive dialled numbers. Dialling numbers on a phone keypad is another example of signaling.

Signaling Types

There are three signaling types and each provide particular information about a voice call:

Signaling Type	***Function***
Supervisory	Supervisory signaling provides information on the subscriber loop or trunk status.
Address	Address signaling is how the phone system directs or routes a call to the call destination.
Informational	Informational signaling tells the phone user or subscribers about call progress.

Address Signaling

Introduction

Address signaling is how the phone system obtains, transfers, controls, and directs information through the phone system. You can think of address signaling as the phone numbering system that identifies each phone in a voice network.

What Does a Phone Number Do?

As an example, we will examine the phone numbering system used in North America. Each phone in North America has a unique phone number or address. As shown in Figure 1-13, the phone number consists of a three-digit area code, a three-digit Central Office number, and a four digit subscriber code. The phone has a phone number or address of 508-261-4000.

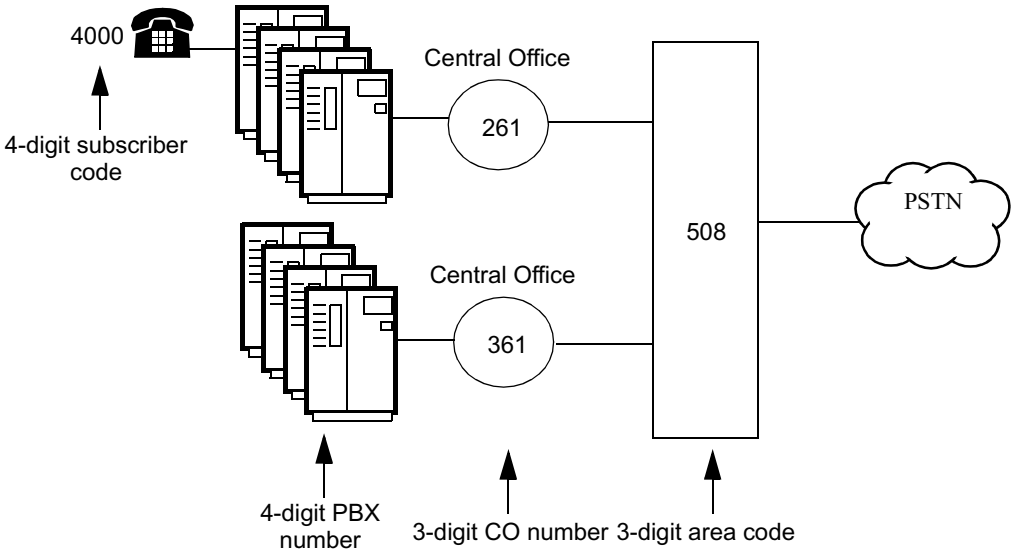

Figure 1-13. Phone Number

All PBXs, Central Offices, or switches will use address signaling to determine how to establish a call to the correct destination. This is called switching the call.

Let's suppose that a phone user pickups the handset at phone 4000 and dials some numbers. These numbers are sent to the PBX. The PBX will examine the dialled number. The PBX first checks to see if the dialled number starts with a 1; in North America, if 1 is the first digit this means that the call is a long distance call to a destination within North America.

If the first number is not a "1," the PBX will then examine the first three digits: the CO number. If the first three digits match the PBX's CO number, the called party is local to the PBX. For local calls, the switch routes the call between the two local subscriber loops.

If a public switch receives a "1," it automatically knows that the called party is not local to the switch. To complete the remote call, the switch must find a path to logically connect the local and remote switch.

Methods of Address Signaling

Introduction

There are two types of address signaling methods:

- Dial pulse. This is associated with rotary dial phones.
- Dual Tone Multifrequency (DTMF) signaling, most often supported on a pushbutton phone.

What is Dial Pulse Signaling?

With dial pulse signaling, digits are sent over the subscriber loop as pulses. On a rotary phone, when you choose a digit and turn the dial, a spring winds. When the dial is released, the spring rotates the dial back to its original position, during which time a cam-driven switch opens and closes the loop. The number of consecutive openings and closings represents the dialed digit. Figure 1-14 shows dial pulse signaling circuits.

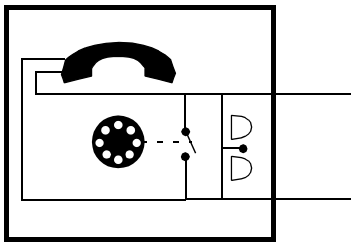

Figure 1-14. Dial Pulse Signaling

Pulse Components

To ensure that any PBX or switch can receive and understand the digits, the digit pulses are produced at a specific rate and are within a certain tolerance.

Each pulse consists of a make and a break as shown in Figure 1-15. The break is a duration of time when the circuit is open; the make is the duration of time when the circuit is closed. The circuit is open (break) 58% of the time and closed (make) 64% of the time.

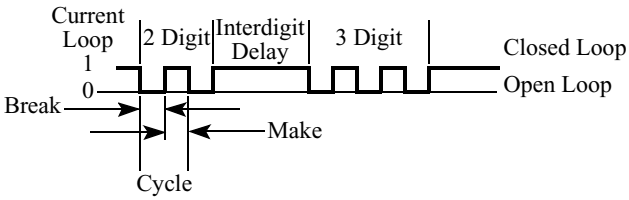

Figure 1-15. Make Versus Break Pulse Cycle

Pulse Rate

A mechanism inside the dial controls the rate at which the digits are pulsed. The digits are pulsed at a consistent rate of 10 pulses per second in the U.S.

Dual Tone Multifrequency (Touchtone)

Many phones use tones instead of pulses to send the digits to the PBX.

The keypad has 12 keys. As shown in Figure 1-16, each key or number has a pair of tones: a low frequency tone and a high frequency tone, hence the name *Dual Tone Multifrequency (DTMF)*. For each row of keys, there are individual low frequency tones. A different high frequency tone represents each column.

When you press a key, the phone sends the digit as a low and high frequency tone. For instance, the number “5” is represented by two tones: 770 and 1209 Hz tone. The keypad has been standardized, but the tone tolerances may vary. The PBX or switch will recognize the two tone frequencies and know that the number “5” was dialled.

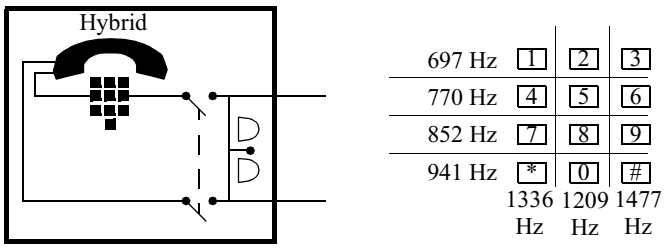

Figure 1-16. Dual Tone Multifrequency

Informational Signaling

Types of Informational Signals

Informational signals are generated by the PBX or switch to tell the user about the call's progress. There are different types of informational signals; the common types include:

- busy signal
- fast busy
- dial tone
- ring back

North American Informational Signals

These information signals are generated as precise, audible tones with a specific cadence. The audible tones most commonly used in North America are as follows:

Signal Name	Tone	Cadence	Description
Dial Tone	350 + 440 Hz	Continuous tone.	The dial tone is generated by the PBX or CO and sent over the subscriber loop. This tells the phone user that the PBX is ready to receive digits. When you hear the dial tone, you can begin dialing digits.
Ring Back Tone	440 + 480 Hz	A tone that is on for 2 seconds and off for 4 seconds.	The ring back tone is generated by the PBX or switch, to tell the caller that the call is in progress and that ringing is occurring at the other end. You will hear the ring back tone until, the person you called has picked up the phone.
Busy Signal	480 + 620 Hz	A tone that is on for 0.5 seconds and off for 0.5 seconds.	The busy signal is generated by the PBX or switch when the call could not be completed because the phone at the remote end is busy.
Fast Busy	480 + 620 Hz	A tone that is on for 0.25 seconds and off for 0.25 seconds.	The fast busy signal indicates to the phone user that the call could not be completed because a path to the remote CO could not be found. All the trunks are busy.
Ringing	86 VAC 20 Hz	A tone that is on for 2 seconds and off for 4 seconds.	The PBX or switch will send a ringer voltage to drive a bell within a remote phone. This will ring the remote phone until it is answered.

Supervisory Signaling

Types of Supervisory Signaling

Supervisory signaling monitors the status of a line or trunk, which is either idle (onhook) or active (offhook). Supervisory signaling types include the following:

- Loopstart
- Ground Start
- E&M

Loopstart Signaling

Introduction

Loopstart is used primarily on local subscriber loops between a phone and a PBX with two-wire interfaces. Loopstart refers to the fact that when the phone handset is lifted or offhook, the switch hook is closed and a loop current flows as shown in Figure 1-17.

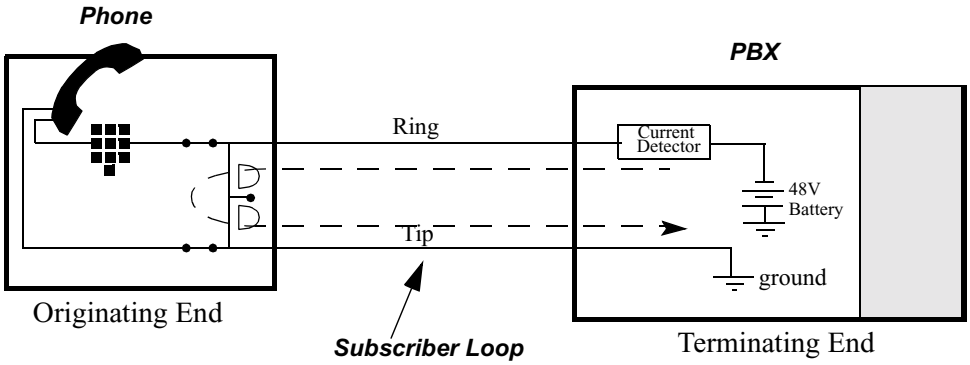

Figure 1-17. Loopstart Signaling

How Loopstart Signaling Works

Before a user lifts the handset from the cradle, the subscriber loop is in the *idle state*. When a user lifts the handset to place a call, the switch hook closes and permits current to flow. The PBX detects current flow and responds with a dial tone, which indicates to the phone user that they can begin dialing digits. The subscriber loop is now in the *active state*. When a user hangs up the phone, the switch hook opens, and the circuit reverts back to the idle state.

The signaling circuitry is not symmetrical in this case; one end has a -48V battery while the other end is the switch hook. The circuit can be described in terms of originate and terminate equipment.

For loopstart signaling, the terminate end supplies the battery and current detect circuitry; the originate end simply provides the switch hook.

■Note

The terms originate and terminate refer only to the hardware configuration and not to who started the call.

Loopstart Signaling and Glare

Loopstart signaling is primarily used for supervisory signaling between a phone and PBX; it is rarely used for supervisory signaling on a trunk line. However, when it is used to supervise trunk lines, loopstart can only be released by the originating (phone) end. If both ends seize the trunk simultaneously, a condition known as *glare* or call collision occurs. Glare can be tolerated for dedicated local loops, but not for high-volume contention trunk lines, which demand two-way supervision.

Ground Start Signaling

What is Ground Start Signaling?

Ground start signaling is used primarily for trunk line supervisory signaling between a PBX and a PSTN with two-wire interfaces. Ground start signaling first checks or handshakes with the PSTN or CO to determine it the trunk line is free. In doing so, ground start signaling avoid glare where both ends attempt to seize the trunk simultaneously.

How Ground Start Signaling Works

The following two tables describe the ground start signaling process. The first describes the normal process. The second describes the process from the Central Office (CO).

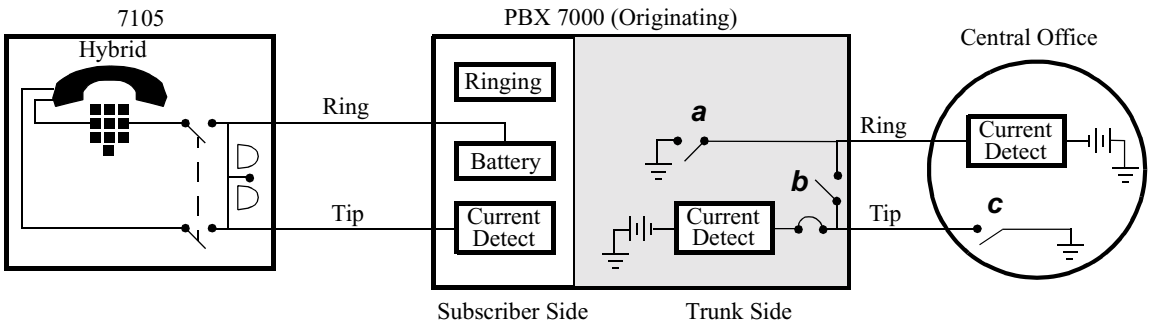

Figure 1-18. Ground Start Signaling

Ground Start Signaling Process from the PBX

Stage	Action	Result
1	To route a call to the local CO, the PBX contends for the trunk line. To determine if the trunk line is available, the PBX closes the Ring switch (a) and causes current to flow end-to-end across the Ring lead.	The CO senses the current flow and interprets it as a trunk seizure request. • If the trunk is available, the CO acknowledges the service request by closing its Tip switch (c), thus grounding the Tip lead and allowing current to flow end-to-end. • The CO also has the option of sending dial tone toward the PBX.
2	The PBX senses the acknowledgment when it detects current flow across the Tip lead.	The handshake is complete.
3	The PBX closes the loop by placing a holding coil (b) across the Tip and Ring lead.	The loop is closed, and the trunk is now busy. When the call is complete, either end can terminate the call.

Ground Start Signaling Process from the CO

Stage	Action	Result
1	The CO can request the trunk by closing the Tip switch (c) and supplying AC voltage (ringing) down the ring lead.	The PBX acknowledges the request by placing the holding coil across tip and ring (b) and removing current detect from the circuit.
2	The loop is complete.	The circuit is seized.

E&M Signaling

Introduction

E&M signaling is a type of supervisory signaling that is commonly used between PBXs.

Separate Voice and Signaling Paths

E&M supervisory signaling differs from loopstart and ground start signaling in that it uses separate paths for voice and signaling (see Figure 1-19), instead of superimposing both voice and signaling on the same wire.

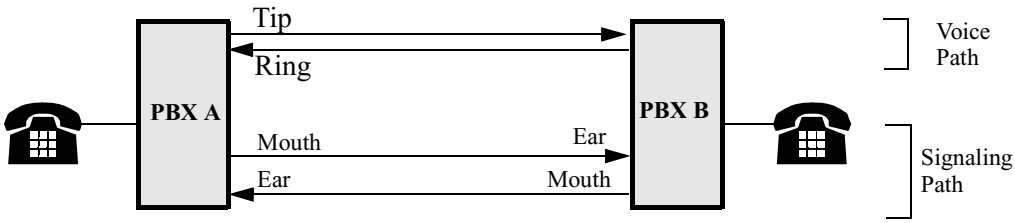

Figure 1-19. E&M Signaling - Separate Voice and Signaling Paths

Voice Path

Voice transmission can be carried over a two-wire or four-wire path as shown in Figure 1-20. When a four-wire path or trunk line is used, the Tip/Ring leads transmit voice traffic while Tip1/Ring1 receives voice traffic.

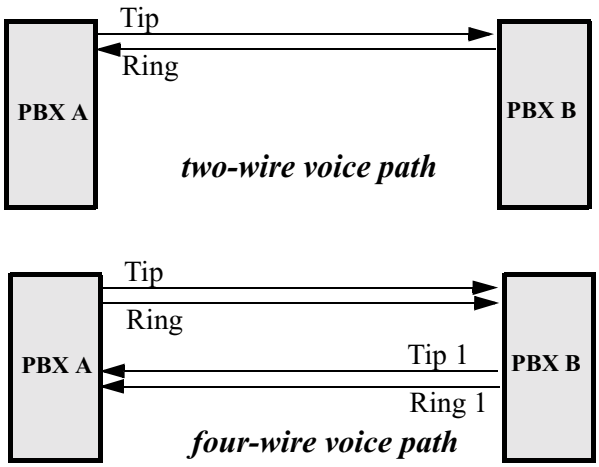

Figure 1-20. Voice Path

Signaling Path

Signaling information is transmitted on the M (Mouth) lead and received on the E (Ear) lead.

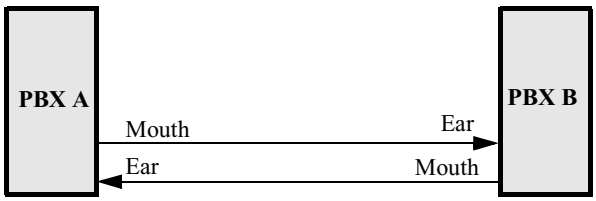

Figure 1-21. Signaling Path

E&M Supervisory Signaling Types

There are different types of E&M signaling which are listed in the table below. The types of E&M signaling differ in the grounding of the E lead or M lead.

E&M Signaling Type	Description
I	E&M type I is commonly used in North America.
II	E&M Type II is commonly used in Canada and Europe.
III	E&M Type III is rarely used.
V	E&M Type V is the most commonly used in Europe. Type V is the ITU (formerly CCITT) standard for E&M signaling.

Voice and Signaling Paths

In Figure 1-22, four-wire E&M type I tie trunks connect PBX A and B. From the PBX, the Tip and Ring leads transmit voice traffic while Tip1/Ring1 receives voice traffic. Signaling information is transmitted on the M lead and received on the E lead.

The voice and signaling wires do not run directly from PBX A to PBX B. Instead, the tie trunk is terminated on a piece of transmission equipment—referred to as the terminating end of the E&M tie trunk. From end to end, the transmission equipment crosses over the appropriate leads: T/R to T1/R1, M lead to E lead, etc.

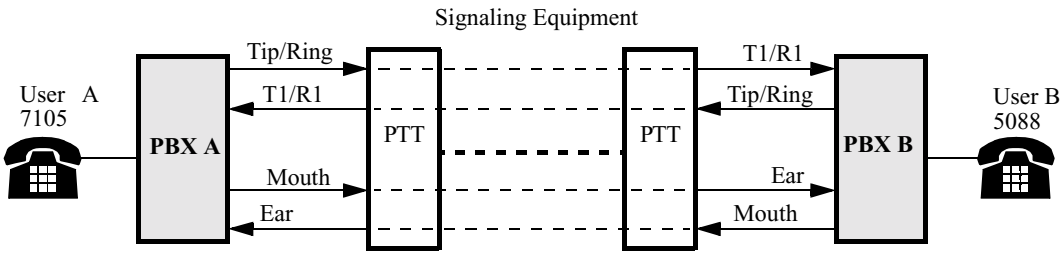

Figure 1-22. E&M Signaling

What Happens During A Remote Call?

In Figure 1-22, User A's phone resides on PBX A: User B's, on PBX B. This table describes the event sequence during a remote call in which E&M signaling is used.

Stage	Description
a)	User A dials 5088, which is not local to PBX A.
b)	Since 5088 is not resident on PBX A, PBX A routes the call to PBX B based on the remote address over one of a number of tie trunks. PBX A requests the use of a specific trunk by using E&M signaling leads.
c)	PBX A requests by raising its M lead. PBX B detects the request when it detects current flow on its E lead.
d)	PBX B acknowledges the request.
e)	PBX A then sends the called digits.
f)	User B answers the phone; PBX B raises its M lead to signal to PBX A that the call is complete.

E&M Type I Signaling

Introduction

Each type of E&M signaling has its own unique wiring scheme.

Type I Signaling Example

In E&M type I, the PBX supplies the battery for both the E and M leads. In the idle, on hook position, the M lead is grounded at both ends. Figure 1-23 shows an example of E&M Signaling Type I.

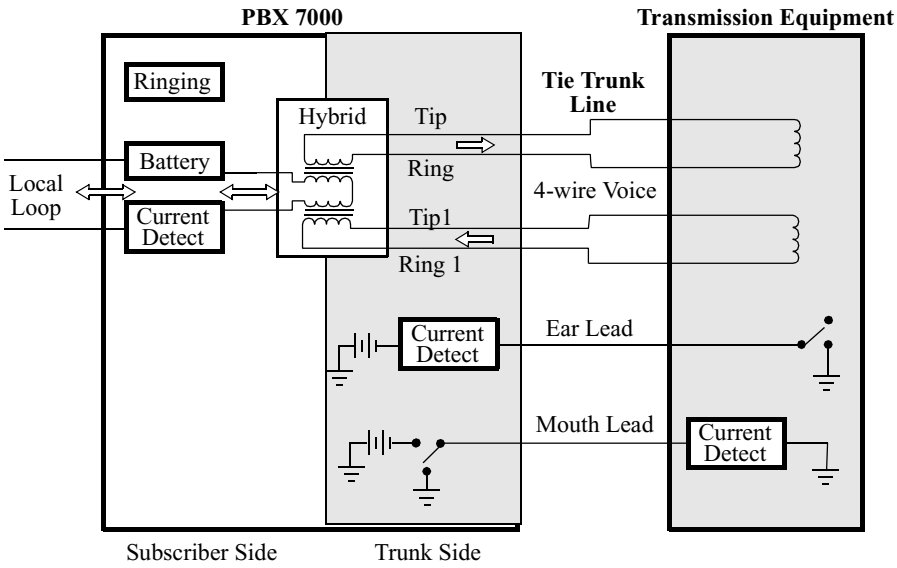

Figure 1-23. E&M Signaling Type I

Limitations: Improper Grounding

Faulty grounds can cause sporadic and unusual problems. In some cases, the signaling operates properly for the first few calls, but not for additional calls.

If two PBXs were improperly grounded, a difference could exist in the ground potential between the PBX and the transmission equipment. Current flows down the M signaling lead; the transmission equipment detects current flow on the M lead, leading to a false seizure of the trunk.

Because of the difference in grounds and the amount of current needed before current flow is detected, this is the most common installation problem with Type I.

E&M Type II Signaling

Introduction

E&M Type II addresses ground potential issues by changing the grounding and adding two more signaling leads: Signal Battery (SB) and Signal Ground (SG). The E lead works in conjunction with the SG lead. The M lead is functionally tied to the SB lead.

Example of Type II Signaling

Figure 1-24 shows an example of E&M Type II signaling.

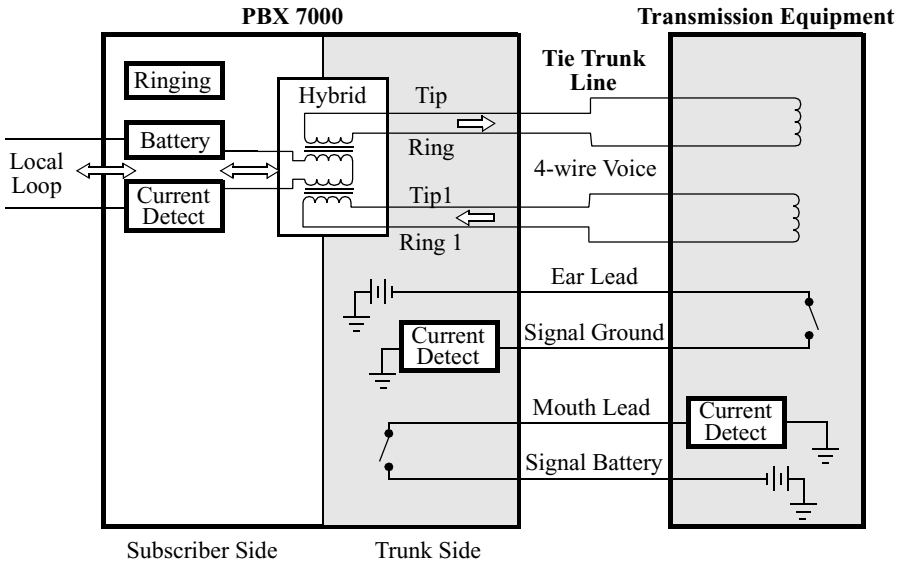

Figure 1-24. E&M Signaling Type II

How Type II Signaling Differs From Type I

In E&M type I, each circuit was grounded at both sides of the signaling circuit. In type II, each circuit is grounded at only one end.

E&M Type III Signaling

Introduction

The E lead signaling is similar to Type I. The M lead uses a loop circuit like Type II. E&M Type III is very seldom seen.

In the idle state, the M lead is tied to the SG lead. To activate the M lead, the PBX ties the M lead to the SB lead. The E lead operates similarly to Type I. To activate the E lead, the signaling ties the lead to ground.

Example of E&M Signaling Type III

Figure 1-25 shows an example of E&M Type III signaling.

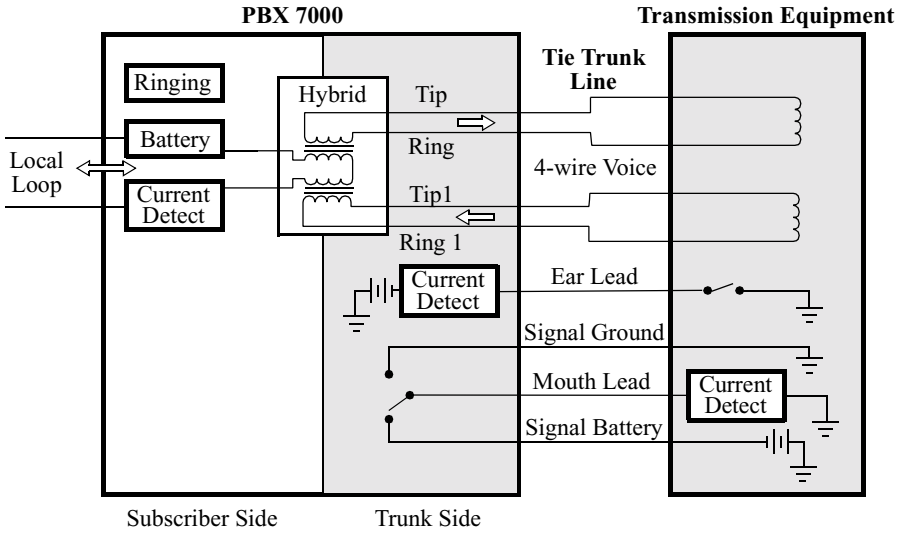

Figure 1-25. E&M Signaling Type III

E&M Type V Signaling

Introduction

E&M Type V is the most common form of E&M signaling outside of North America. It is the ITU (formerly CCITT) standard for E&M signaling.

Example of E&M Signaling Type V

Figure 1-26 shows an example of E&M Type V signaling.

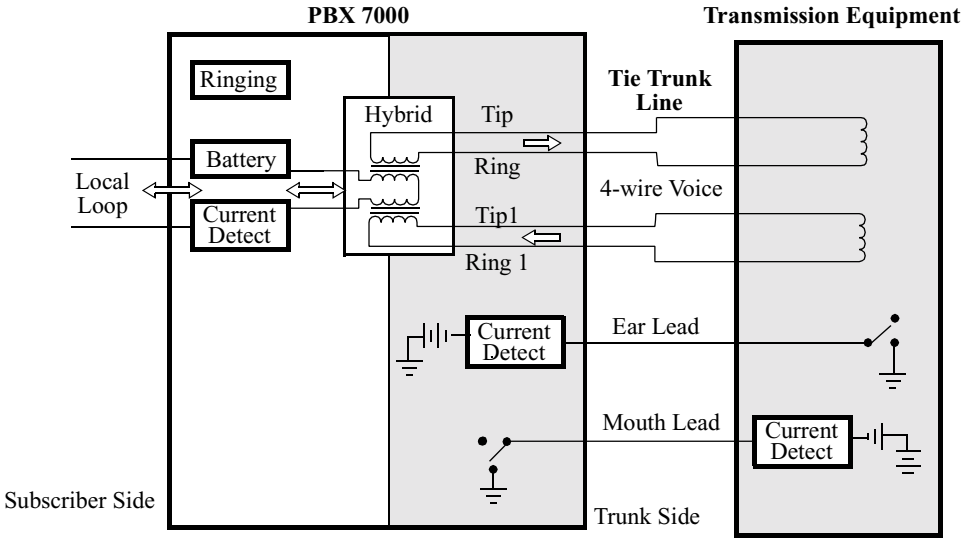

Figure 1-26. E&M Signaling Type V

How Type V Differs from Type I

E&M Type V differs from E&M Type I in the placement of the battery for the M lead, which is located in the transmission equipment. The battery for the E lead is located in the PBX.

Distance Limitation

E&M signaling between PBXs is limited to distances of less than 200 feet. In order to use E&M signaling between PBXs separated by distances greater than 200 feet, signal converters are required. When signal converters are used, the signaling leads must cross over appropriately as shown in Figure 1-27.

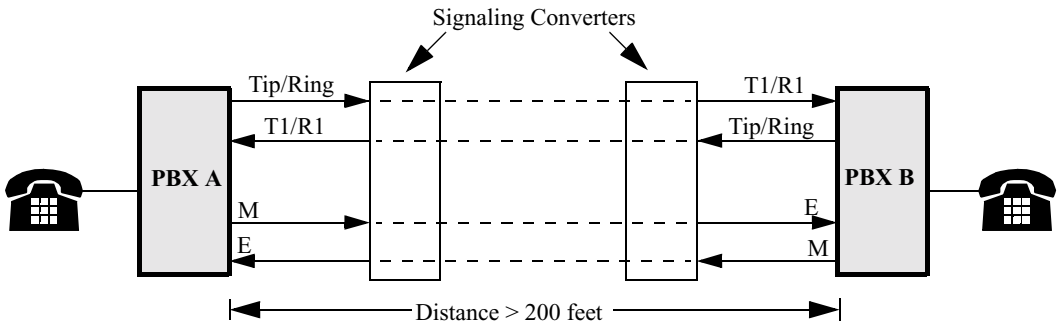

Figure 1-27. E&M Signaling over Long Distances

Seizing a Trunk using E&M Signaling

Introduction

There are different types of E&M signaling protocols used to seize a trunk, including:

- E&M Immediate Start
- E&M Delay Start
- E&M Seizure Acknowledgment Start
- E&M Wink Start

In this section, we will examine a few examples how a trunk line is seized to place a call.

Seizing a Trunk

Figure 1-28 and the table below describe the how E&M signaling is used to seize a trunk.

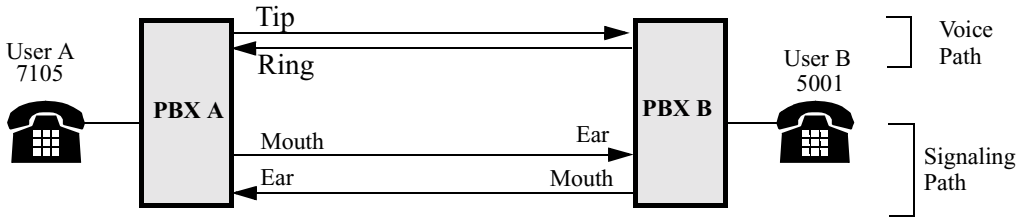

Figure 1-28. Example of E&M Signaling

Step	Description
1	User A dials the digits 5001, which is not local to PBX A.
2	Since 5001 is not resident on PBX A, PBX A must route the call to PBX B over one of the tie trunks. PBX A first requests the use of a specific trunk by using E&M signaling leads.
3	PBX A begins by putting a request signal on its M lead (this is also known as raising the M lead). PBX B detects the request when it detects current flow on its E lead.
4	PBX B acknowledges the request by providing battery or current on its M lead. PBX A detects the response when it detects current flow on its E lead.
5	PBX A then sends the called digits.
6	When User B answers the phone, PBX B raises its M lead to signal to PBX A that the call is complete.

E&M Immediate Start Protocol

Figure 1-29 and the accompanying table show the sequence of events during immediate start E&M signaling. This signaling is called immediate start because a source PBX will immediately send address signals (dialled digits) after a predetermined time.

Step	Description
1	PBX A begins by putting a request signal on its M lead. PBX B detects the request when it detects current flow on its E lead. At the same time, PBX B provides a dial tone over the voice path.
2	Instead of waiting to receive an acknowledgment PBX A waits a predetermined time and forwards the digits on its M lead.
3	Upon receiving the digits on its E lead, PBX B signals the remote phone with ringing.
4	When User B answers the phone, PBX B raises its M lead to signal to PBX A that the call establishment is complete. PBX B only acknowledges PBX A after the called party answers the call.

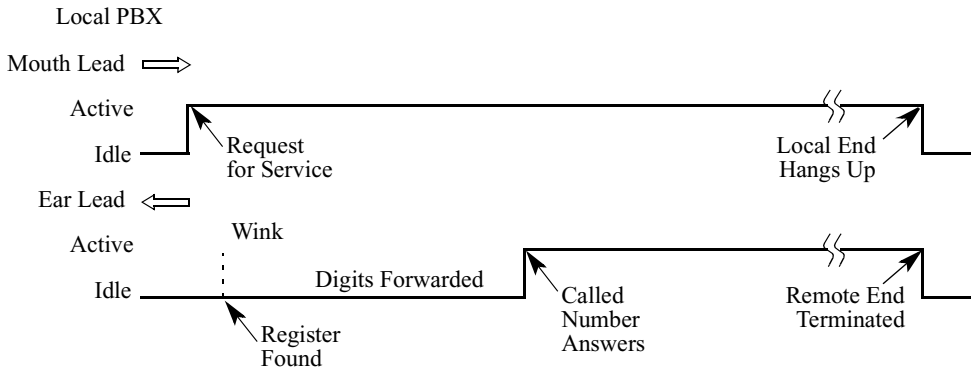

Figure 1-29. Immediate Start Protocol Event Sequence

Delay Start Protocol

Figure 1-30 and the accompanying table show the sequence of events using the delay start signaling protocol.

Step	Description
1	PBX A seizes the trunk toward PBX B.
2	PBX B momentarily raises its M lead while it attaches an address register.
3	The remote end then goes back on hook while the digits are forwarded (sometimes referred to as the proceed to send signal).
4	The call is answered.
5	The remote end goes off hook for the duration of the call.

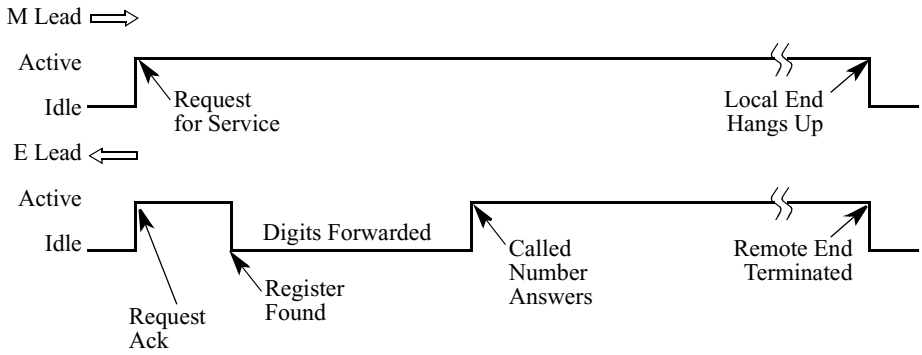

Figure 1-30. Delay Start Protocol Event Sequence

Seizure Acknowledge Start (or Telenormal) Protocol

The Seizure Acknowledge protocol is a variation of the standard Delay Start. The difference, illustrated by the waveforms in Figure 1-31, is the absence of Proceed-to-Send signal and the Answer signal.

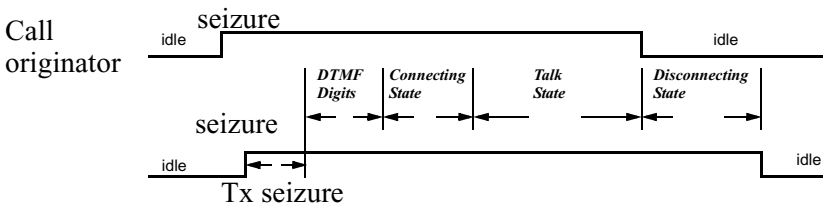

Figure 1-31. Seizure Acknowledge Call Origination/Disconnect Normal Trunk Signaling

E&M Wink Start Protocol

Figure 1-27 and the accompanying table show the sequence of events during wink start protocol signaling.

Stage	Description
1	The calling office seizes the line by going off hook.
2	Upon recognizing the seizure, the called end does not immediately return an off hook. The onhook state is maintained until the receive digit register is attached.
3	The called office toggles the off hook lead for a specified time. This onhook offhook/onhook sequence represents the “wink.”
4	The calling office receives the wink and forwards the digits to the remote end.
5	The called party answers the phone, and the remote PBX raises the M lead during the call.

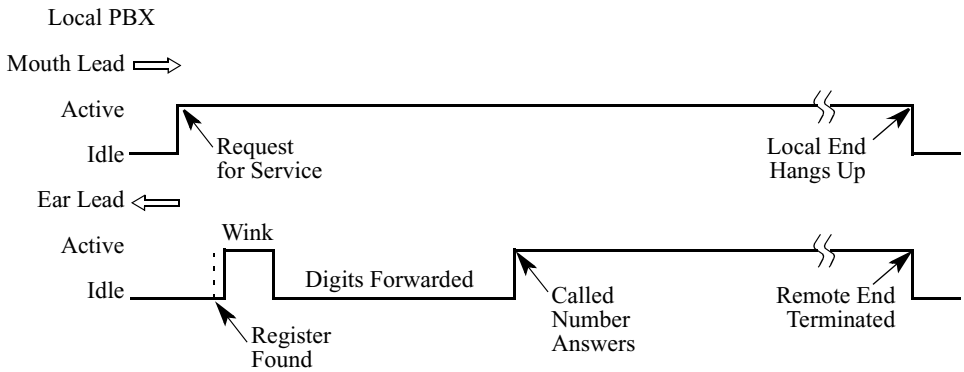

Figure 1-32. Wink Start Protocol Event Sequence

Chapter 2
Digital Voice

Overview

Analog to Digital

In Chapter 1, we mentioned that our speech is carried over the phone line as an electric signal. Our speech is actually an acoustical, analog waveform signal. In an analog telephone, our speech is an electric signal that has a frequency and amplitude. The frequency of the signal is a measure of the pitch of our speech. The amplitude or height of the signal measures the loudness of our speech.

Digital voice is simply an analog waveform signal converted to binary code data, 1s and 0s. Figure 2-1 illustrates an example of an analog waveform and a digital voice representation.

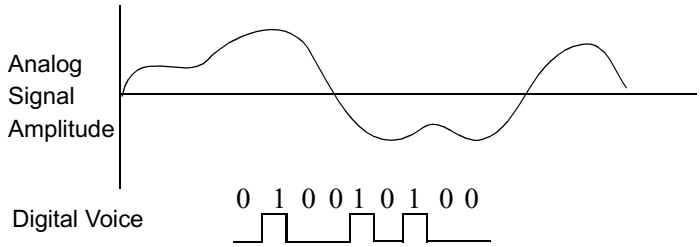

Figure 2-1. Analog and Digital Voice

Why Do You Want To Convert Analog Voice to Digital Voice?

As our speech is carried in the phone, over subscriber lines, into PBXs and across the PSTN, it picks up noise and distortions. The greater the distance the voice has to travel the more likely it picks up enough noise and distortion that the original speech becomes difficult to understand. In addition, analog voice that is carried over long distances is attenuated, which means that the volume goes down.

Many trunk lines in use to link central offices are actually digital trunk lines. Telephone companies and carriers use digital lines because they are more dependable and are less sensitive to noise and distortions. The inherent benefits of digital voice are:

- Digital voice quality is independent of distance.
- Digital voice can be multiplexed onto one channel; this reduces equipment and cost.
- Digital trunk lines can replace the cost of six to eight analog trunk lines.

What is in this Chapter?

In this chapter, you will learn:

- How analog voice is converted to digital voice and vice versa. Coders, decoders, sampling, and digitization methods well be discussed.
- About digital voice transmission over digital trunk lines: T1 and E1.
- About digital voice signaling - CCS and CAS signaling.

Analog to Digital Voice Conversion - Coders

What are Coders and Compressors?

Analog to digital voice conversion or voice coding is performed by devices called coders. Coding refers to the entire process of converting analog to digital voice and vice versa. Compression refers to the method of reducing the amount of digital information required to represent the voice signal. Most coders provide both coding and compression functions. Compressing speech is desired to use bandwidth more effectively. By compressing speech from 64000 bps to 32000 bps we can double the amount of voice traffic than we can carry on a single digital link.

Types of Coders

There are two many types of coders:

- Waveform coders are the traditionally used coders. They provide low amounts of signal distortion at moderate levels of data rate (between 16000 to 64000 bps). Voice signals that pass through a waveform coder and decoder maintains highest toll quality speech.
- Model based speech coders or Vocoders - Vocoders analyze and compare speech to pre-defined analytical models of speech. Vocoders compress digital voice to minimize the number of bits required to represent the voice signal. Vocoders typically operate a lower data rates of 8000 bps.

Deciding on the coder to use depends on a number of factors. If bandwidth is at a premium, select a coder that provides compression. If the digital link has enough bandwidth and if voice quality is important, you can opt for a coder without voice compression. Voice quality is also another factor to consider. If voice is encoded and compressed this likely means that more processing time is needed on the voice sample, hence this introduces delay. For some vocoders, this delay is negligible; for other vocoders, longer delay can introduces echo.

Some of the commonly used coders are listed:

Type	*ITU Standard*	*Coding Method Name*	*Data Rate*	*Description*
Waveform Coder	G.711	Pulse Code Modulation PCM	64 kbps	Pulse Code Modulation (PCM) provides the highest toll quality voice suitable for a digital PSTN network, at data rates of 64 kbps. PCM provides no compression.
	G.726	ADCPM	16, 24, 32, 40 kbps	Adaptive Differential Pulse Code Modulation (ADPCM) provides medium to high quality voice at lower data rates of 16, 24, 32, or 40 kbps.

Type	ITU Standard	Coding Method Name	Data Rate	Description
Vocoders	G.728	CELP	16 kbps	G.728, which describes Code Excited Linear Predictive (CELP) voice compression, requires only 16 kbps of bandwidth.
	G.729	ACELP	8 kbps	G.729, describes adaptive CELP compression that enables voice to be coded into 8 kbps streams G.729 coding provides speech quality comparable to 32 kbps ADPCM.
	G.723.1	H.323	5.3 and 6.3 kbps	G.723.1 is part of the H.323 family of standards. This coder has two bit rates associated with it—5.3 and 6.3 kbps.

Compression and MOS Scores

The coders listed above, G.726, G.728, G.729, and G.723.1, all provide some form of voice compression in addition to voice coding. Voice compression provides the key benefit of lower bit rates and hence less bandwidth usage. However, voice compression is not always desirable as it may cause robotic sounding voice after it is decompressed and de-encoded. In addition, compression may also introduce delay, echo, and coupled with network delay, may result in loss of voice quality. The Mean Opinion Score (MOS) scale is use to quantify voice quality with zero as poor quality and five a high quality. Often voice quality of compression schemes are compared against toll quality PCM voice which has a MOS score of 4.4. The MOS scores of the coders we examined earlier are listed below:

ITU Standard	Coding Method Name	MOS
G.711	PCM	4.4
G.723.1	H.323	3.98 to 3.5
G.726	ADCPM	4.2
G.728	CELP	4.2
G.729	ACELP	4.2

Note

The MOS score only provides objective speech quality when comparing different compression schemes. Perceived speech quality varies from to person to person and depends on a person's toleration for noise, echo, or static.

Silence Suppression or Voice Activity Detection (VAD)

Studies of telephone conversations have found that we talk 40% and listen 60% of the time. This 60% of time represents periods of silence when we pause or listen. Silence Suppression or Voice Activity Detection (VAD) capitalizes on these silent period by not sending packets for these periods of silence. The noise and silence is re-inserted at the remote end, enabling the user to transmit approximately half as much traffic. VAD or Silence Suppression reduce bandwidth usage by approximately 50 to 60%. This method can equate to 2:1 compression.

Waveform Coders - How They Work

How is Analog Voice Converted to Digital Voice?

Waveform coders convert analog voice to digital voice in two steps:

- sampling
- quantization

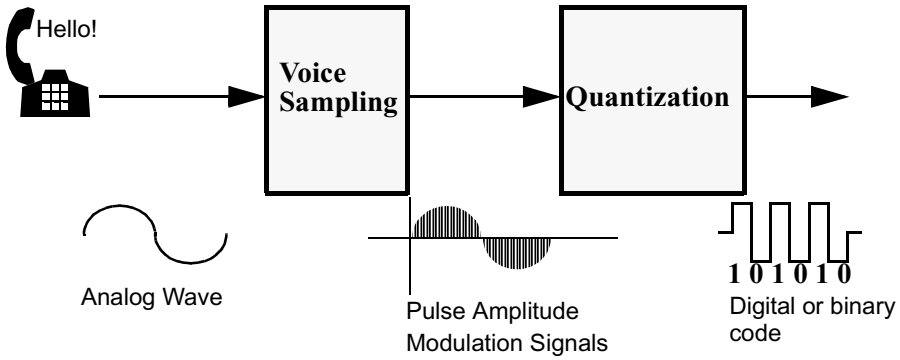

Figure 2-2. Analog to Digital Voice Conversion

Waveform coders provide very high quality voice speech at medium bit rate.

Sampling

The first part of analog to digital conversion is sampling the analog wave form. Sampling is analogous to taking a photograph of the waveform at a defined time interval.

The Nyquist Theorem stipulates that the sampling rate should be two times the highest voice frequency 4000 Hz. Therefore, the analog wave form is sampled 8000 times per second.

Sampling of the analog wave form results in a series of pulses or lines that represent the amplitude of the analog signal. These signals modulate the original analog signal and are called Pulse Amplitude Modulation, *PAM signals*.

Quantization

The next step is to digitize the PAM signals, or convert them into 1s and 0s. This is done by a process known as quantization. Quantization associates the height or amplitude of the PAM signal with a predefined binary code.

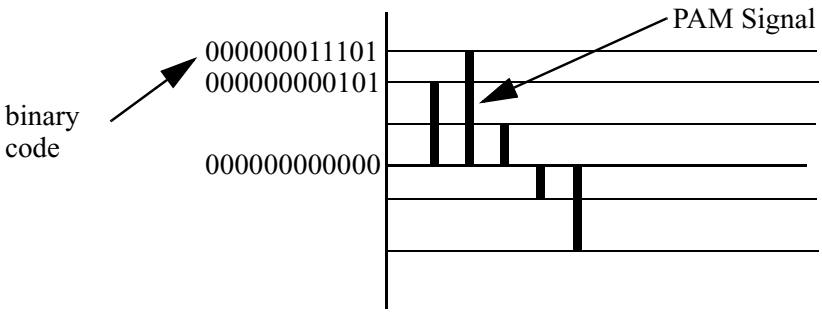

Figure 2-3. Quantization

Each PAM signal is associated with a binary code and thus the entire analog waveform is represented by a continuous stream of binary bits. In the next section, we will look at the two main types of quantization methods:

- Pulse Code Modulation
- Adaptive Differential Pulse Code Modulation

Pulse Code Modulation (PCM)

Introduction

Pulse Code Modulation (PCM) is a quantization process that compares PAM signals against a logarithmic scale. Let us see how the logarithmic scale is used to determine how a signal is represented as 0s and 1s.

Logarithmic Scale

The logarithmic scale consists of eight divisions known as *chords*. Each chord is further subdivided into 16 equally spaced *steps*. The logarithmic scale is also divided into positive and negative chords, referred to by *polarity* (+/-). In total there are 256 levels (8 chords x 16 steps x 2 poles) against which the PAM signal is compared.

Each chord is associated with a 3-bit binary value; each step is associated with a 4-bit binary value. The polarity of the PAM signal can be + or -, where + is represented by 1, and - is represented by 0. Combining the polarity, chord, and step binary values results in an 8-bit binary word.

Figure 2-4 illustrates PCM used to quantize a PAM Signal. The sample equates to a positive 5th chord 10th step, it is encoded as 1 (+), 101 (5th chord), and 1010 (10th step), or 1101010.

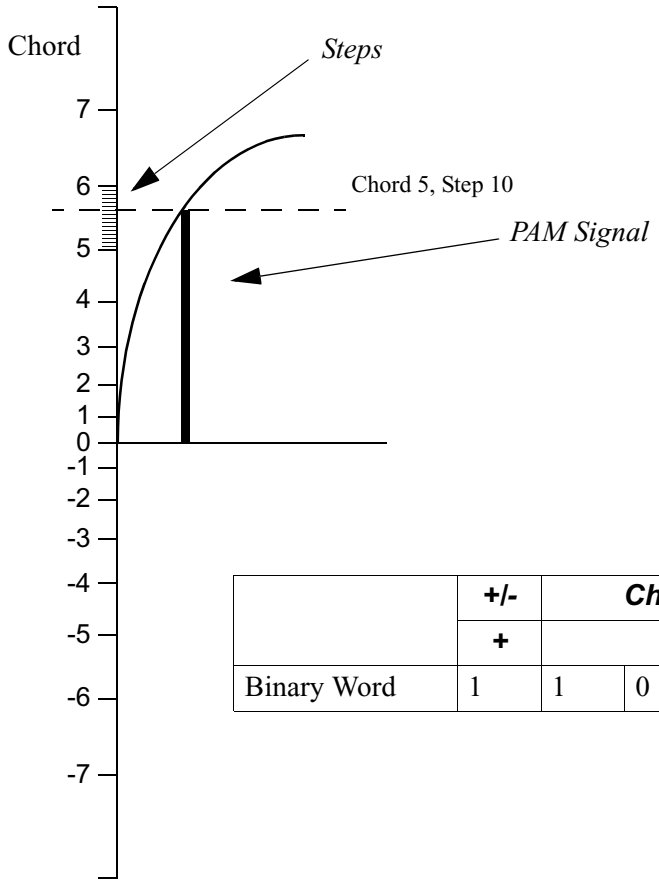

	+/-	Chord			Step			
	+	5			10			
Binary Word	1	1	0	1	1	0	1	0

Figure 2-4. Pulse Code Modulation - Quantization Process

Types of PCM Scales

There are two types of PCM logarithmic scales:

- A-law - used primarily in Europe, South America and Asia (E1 lines)
- µ-law - used primarily in North America, Japan, and Korea (T1 lines)

Both methods use slightly different logarithmic scale and therefore, they are not end to end compatible.

Bandwidth Requirements

If an analog waveform is sampled 8000 times per second, and each sample is quantized by eight bits, the data rate or bandwidth required to transport a voice sample is 64000 bits/second (bps).

Adaptive Differential Pulse Code Modulation (ADPCM)

What is ADPCM?

Adaptive Differential Pulse Code Modulation (ADPCM) is similar to PCM. ADPCM uses the same PCM logarithmic scale. However, with ADPCM each PAM sample is compared against previous PAM sample, and the difference between samples is noted. The difference between samples is converted into binary bits and this is sent over to the receiving end. As a result, less bits are required to define the analog wave form. The inherent benefit of ADPCM is a reduction of data rate to 16000-40000 bps.

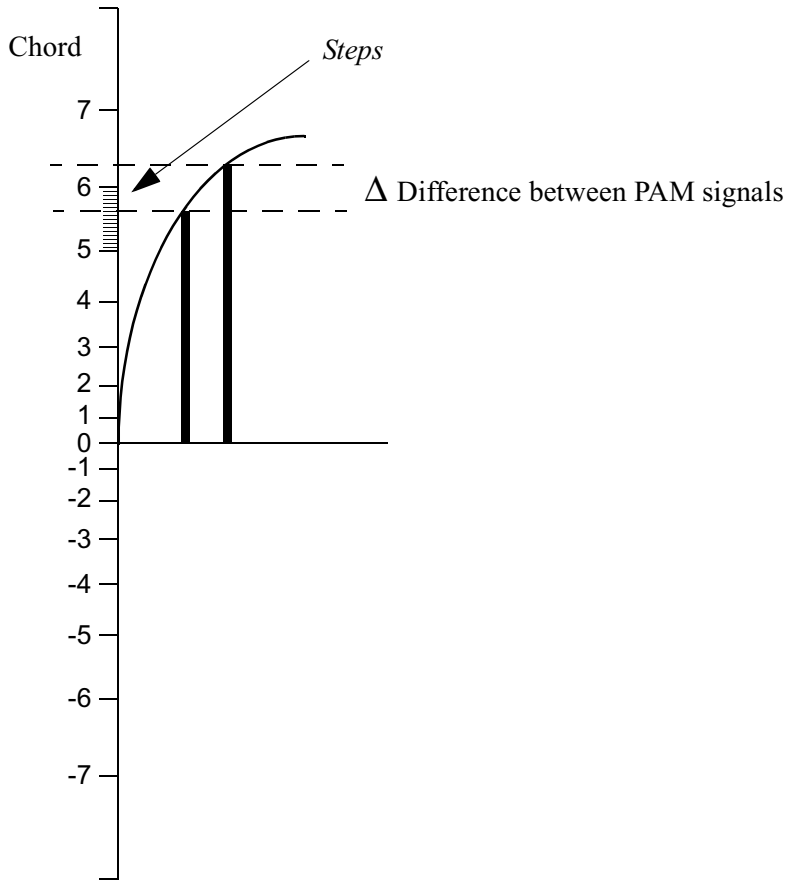

Figure 2-5. Adaptive Differential Pulse Code Modulation

Types of ADPCM

There are different versions of ADPCM. The types depend on the number of bits used to represent the difference between successive samples. The versions of ADPCM listed below result in different data rates:

- 5 bits/sample, 40000 bits per second
- 4 bits/sample, 32000 bits per second
- 3 bits/sample, 24000 bits per second
- 2 bits/sample, 16000 bits per second

Limitations of ADPCM

ADPCM can be problematic, when a signal changes dramatically, because the difference between samples is too large to handle. As a result the output becomes distorted and voice quality may suffer. The more bits used, the better the quality of the voice transmission.

Vocoders - How They Work

How Vocoders Work

Unlike waveform coders, which directly model the waveform analog signal, vocoders analyze and compare speech against predefined analytical models of the human vocal tract. Typically, vocoders samples speech over a period of time and collect information about the speech. The information collected includes vocal tract, amplitude, pitch, and voice or noise information. This information, called parameters, is then multiplexed for transmission over the digital line.

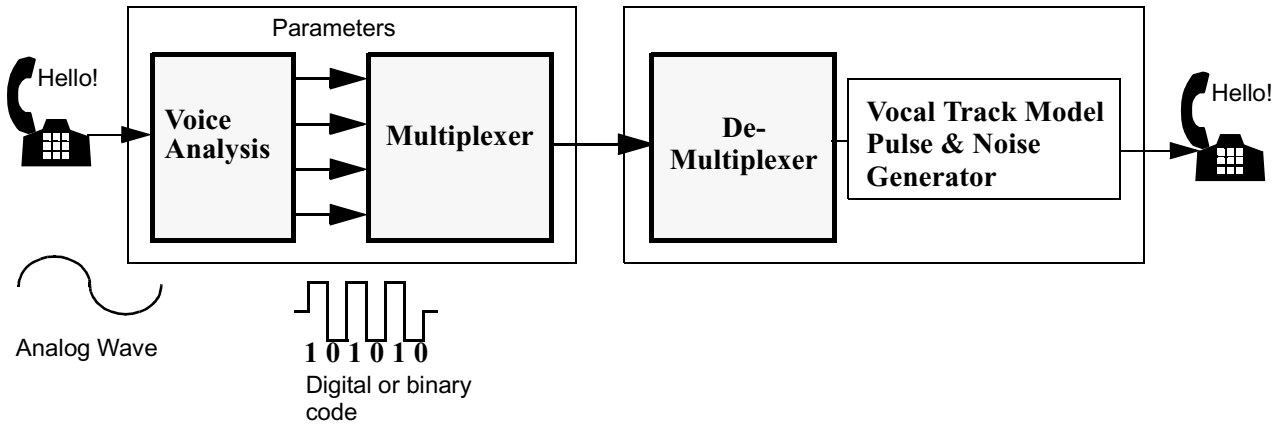

Figure 2-6. Vocoders

A decoder uses the received parameters to regenerate the speech. The pulse generator reproduces the speech in a analog waveform and the noise generator inserts noise. This analog waveform then passes through a vocal track filter. Because vocoders do not have to model the entire analog signal, vocoders operate at much lower bit rates, typically 8000 bps to 24000 bps. However, the disadvantage of vocoders is that they tend to produce synthetic, machine sounding voice.

Code Excited Linear Predictive Coding (CELP)

What is CELP?

Code Excited Linear Predictive Coding (CELP) is a vocoder algorithm. CELP is actually a hybrid coder that uses both waveform coder and vocoder principles for encoding voice. CELP essentially takes the best of both worlds by providing significantly better voice quality than vocoders while using lower bit rates than PCM or ADPCM. CELP typically operates at bit rates of between 4800 to 16000 bps.

How does CELP Work?

CELP operates on the principle of vocoders and waveform coders by:

- Analysing speech and generating parameters that match an analytical vocal track model. (Vocoder)
- Generating a compressed representation of the differences between the original analog waveform of the speech and the analytical model. (Waveform Coder)

CELP vocoders take samples of the analog waveform at predefined intervals. These samples are then compared against analytical models of speech. The analytical model that most closely matches the analog waveform has an identifier called a codebook index. This codebook index is transmitted along with other vocoder parameters. At the receiving end, the decoder sees this codebook index to look up the codebook and find the analytical model. This analytical model is then used to reconstruct the speech.

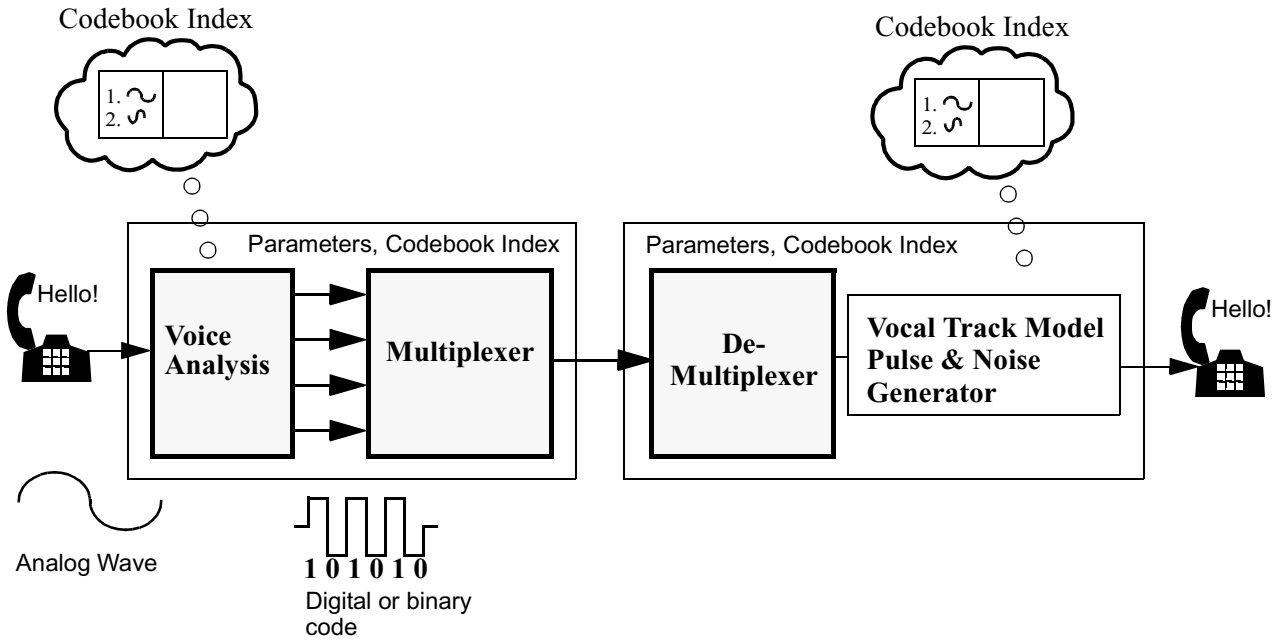

Figure 2-7. CELP Vocoder

Limitations of CELP

CELP is commonly used because of its high voice quality at relatively low bit rates. There are numerous proprietary CELP algorithms available.

CELP does have its disadvantages though, because it has to analyze and compare the speech there is processing delay. This contributes to an end-to-end delay in the range of 50 to 100 milliseconds. Overall, this can cause problems such as echoing. In addition, as CELP is based on vocal tract models, it cannot support tones generated by modems, faxes, or DTMF tones.

Digital Voice Transmission

Introduction

After an analog voice converted to digital voice it can be transmitted over the same components examined in Chapter 1. The PBX continues to provide analog interfaces to the phones, however, it may require digital interfaces to connect to digital trunk lines. The analog-to-digital conversion function may be performed by a digital PBX or an analog PBX may connect to a channel bank or multiplexer that multiplexes multiple voice calls onto a digital data stream.

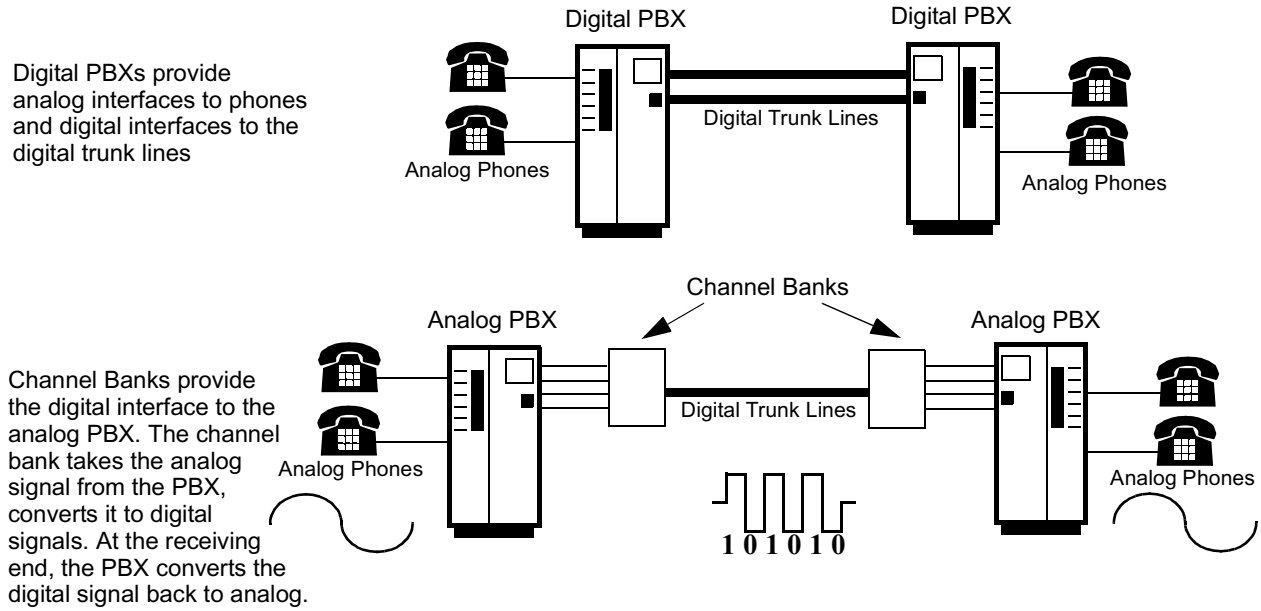

Figure 2-8. Digital Interfaces

Channel Banks and Multiplexers

Function of Channel Banks and Multiplexers

The channel bank or multiplexer performs the following functions:

- convert an analog voice into digital voice using PCM
- multiplex the digital voice and signal together onto one data stream
- transmit the data stream over a digital trunk

In this example, the digital PBX at the receiving end de-multiplexes the received data stream and convert the digital voice back to analog before forwarding to the subscriber loop.

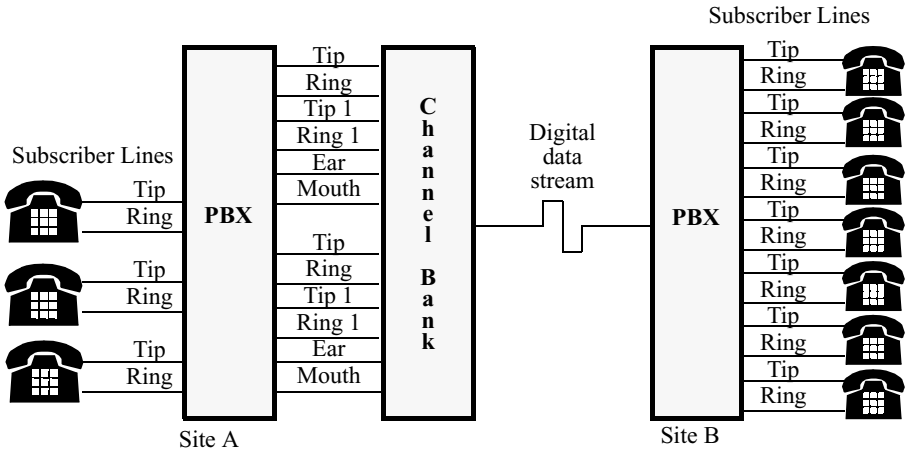

Figure 2-9. Channel Banks and Multiplexers

Types of Digital Stream

There are two types of digital data streams, T1 and E1. Each is discussed in more detail in the next sections.

T1 Digital Voice Transmission

What a T1 Channel Bank or Multiplexer Does

A T1/DS-1 channel bank or multiplexer first converts analog voice into digital voice using PCM. The resulting 8-bit sample is then combined or multiplexed with 23 other 8- bit samples onto a single frame. As shown in Figure 2-11, each 8-bit sample within the frame occupies a *timeslot* or a *DS0*.

Note

The terms timeslot and channel are used interchangeably.

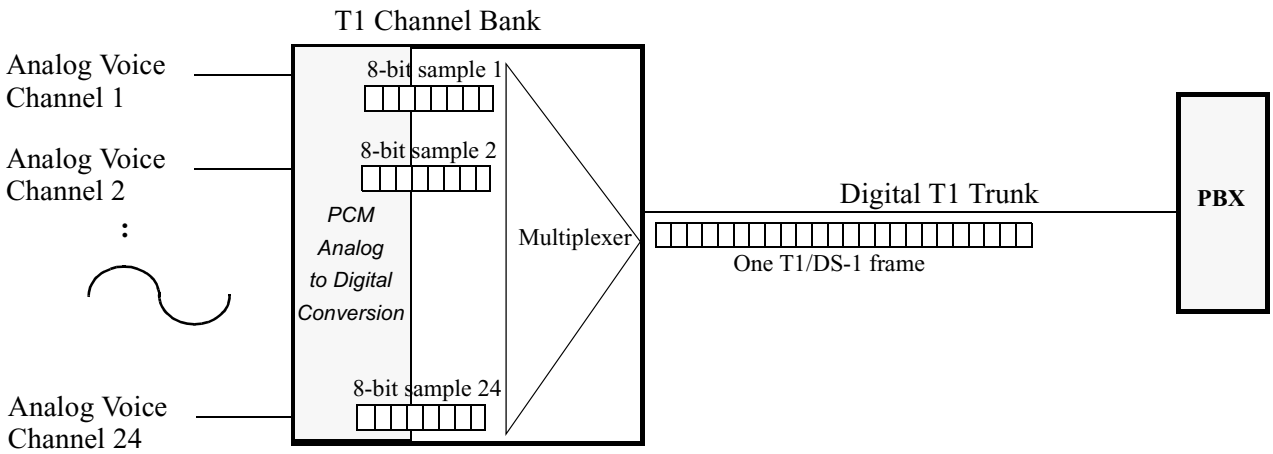

Figure 2-10. Example of T1 Multiplexing

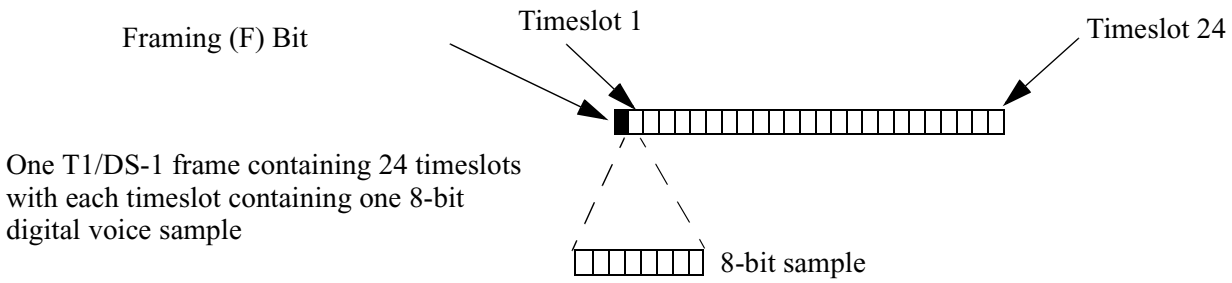

Figure 2-11. T1 Frame

In total there are 193 bits per T1 frame; 192 bits of voice data (24 x 8-bit samples) and 1 bit, the *F bit*, is used for framing. The framing bit is used to synchronize the multiplexer and de-multiplexer. Timeslot 24 can also be used for supervisory signaling.

T1 Speed

We often hear of T1 speed as 1.544 Mbits/second or 1,544,000 bits/second. This is determined by:

Sampling at 8000 times/second x Each sample is 8 bits = 64000 bits/second
x 24 timeslots per frame
1,536,000 bits/second
+ 8000 bits/second of framing bits
1,544,000 bits/second

T1 Superframing

What Is A Superframe?

Typically a T1 frame is not sent individually. For administrative purposes, the T1/DS-1 frames are further grouped into a Superframe (SF). A superframe contains 12 T1 frames.

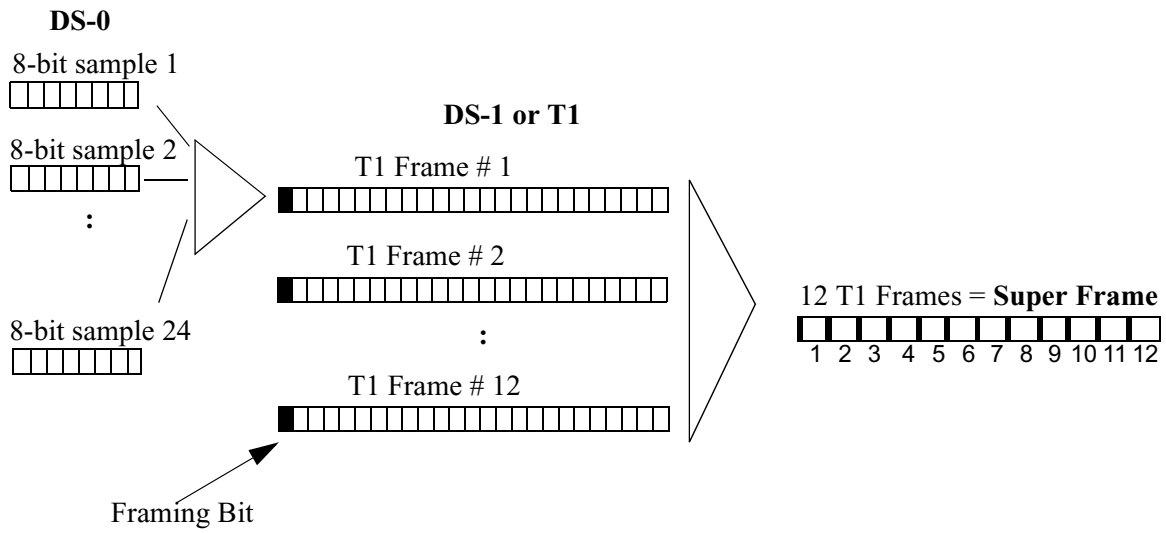

Figure 2-12. T1 Super Frame Format

How Are Framing Bits Used for Synchronization

As mentioned earlier, a predefined framing bit is added to each T1 frame. In a superframe, the 12 individual framing bits can be combined to make up the following bit pattern, 100011011100. To synchronize the transmitting multiplexer and the receiving de-multiplexer, the receiving demultiplexer examines the framing bit of every odd frame in a superframe. If frames are received correctly and in sequence, the bit pattern is as underlined 100011011100 or 101010. This means that the demultiplexer is synchronized with the multiplexer.

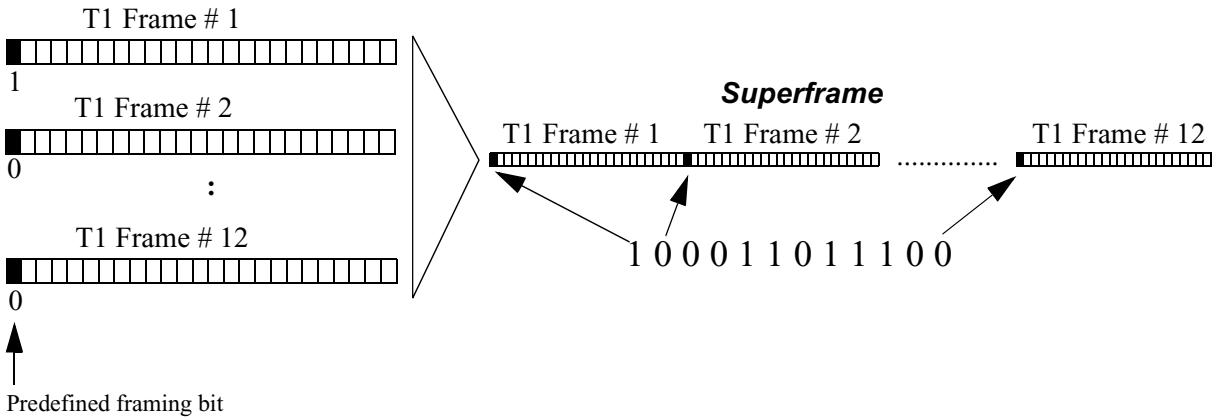

Figure 2-13. Framing Bits

Extended Super Frame

A more commonly used grouping of T1 frames is Extended Super Frame (ESF). Extended Super Frame contains 24 T1 frames. The framing bits are used differently. Six out of the 24 framing bits are used for synchronization purposes. The remaining 18 framing bits are used for CRC error detection and a 4- kbps data channel. The error detection allowed the remote device to monitor the bit errors within the T1 frames via the ESF CRC check.

E1 Digital Voice Transmission

Introduction

E1 framing is similar to T1 framing. However, in the case of E1 digital voice transmission, 30 8-bit voice samples are multiplexed into one E1 frame. 16 E1 frames are then grouped to form a *mulitframe*.

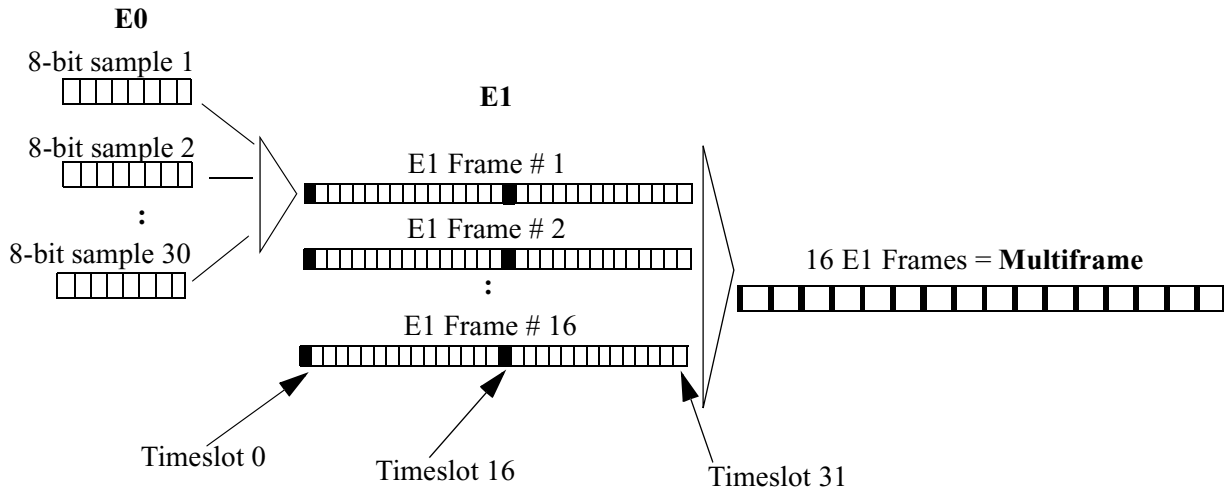

Timeslot 0 - Framing Byte

Timeslot 1-15- Data

Timeslot 16 - Signaling (For more information, see “E1 CAS” section on page 2-25.)

Timeslot 17-31 - Data

Figure 2-14. E1 Multiframe

In total, there are 256 bits per E1 frame; 240 bits of voice data (30x8), 8 bits for signaling, and 8 bits for framing.

Framing Byte

The first timeslot, timeslot 0, of the E1 frame contains the framing byte. The framing byte for even number E1 frames within the multiframe has one of following pattern, 10011011(international call) or 00011011(normal call).

The framing byte for odd frames within the multiframe provides frame synchronization and alarm reporting. Each of the eight bits within this framing byte provides the following function:

Bit	Function
1	Used for CRC_4 frame checking. Bit 1 can also be used for International calls where: • 0 indicates a normal, non-international call • 1 indicates an international call
2	Used for frame synchronization. The binary value of bit 2 alternates for E1 frames within a multiframe. For example, bit 2 of the framing byte for the first E1 frame is 1; bit 2 of the framing byte for the second E1 frame is 0 and so on.
3	Used to for Remote Alarm Indication (RAI) where a binary value of: • 0 indicates normal operation • 1 indicates lost frame alignment
4 to 8	Spare bits used to carry proprietary messages between PBX. 1111 indicates normal operation.

E1 Speed

We often hear of E1 speed as 2.048 Mbits/second or 2,048,000 bits/second. This is determined by:

Sampling at 8000 times/second x Each sample is 8 bits = 64000 bits/second
x 32 timeslots per frame
2,048,000 bits/second

Digital Signaling

Introduction

Like analog phones and PBX discussed in Chapter 1, digital equipment also communicate via signaling. Unlike analog signaling, that uses dedicated path or wire for signaling transmission, digital signaling is carried within the voice channel or timeslot. This section examines two types of digital signaling:

- Channel Associated Signaling (CAS) or Robbed Bit Signaling - Supervisory signaling used to monitor the status of the digital T1 or E1 trunk.
- Common Channel Signaling (CCS) - Messaging based signaling.

Channel Associated Signaling (CAS)

What Channel Associated Signaling Does

Channel Associate Signaling (CAS), also known as Rob Bit Signaling, conveys digital supervisory signaling information within the voice channel. The process is called Rob Bit Signaling, because the least significant bit within a timeslot is robbed and used to carry supervisory signaling information. The number of bits that are used varies for T1 and E1 frames.

CAS only carries supervisory signaling to indicate the status of the T1 or E1 trunk, onhook and offhook.

Why is Distortion Caused by CAS Negligible?

Any distortion introduced by bit robbing technique to the digital voice sample is negligible. Suppose, for example, we have a voice signal with the PAM signal shown in Figure 2-15. This PAM signal translates into a binary word of 1101 101**0**. If we were to rob the least significant bit, the resulting binary word would be 1101 101**1.** This binary word translates into positive polarity, chord 5, and step 9. If we represent this binary word as a PAM signal, the difference from the original PAM signal is very small and hence distortion of the signal is negligible.

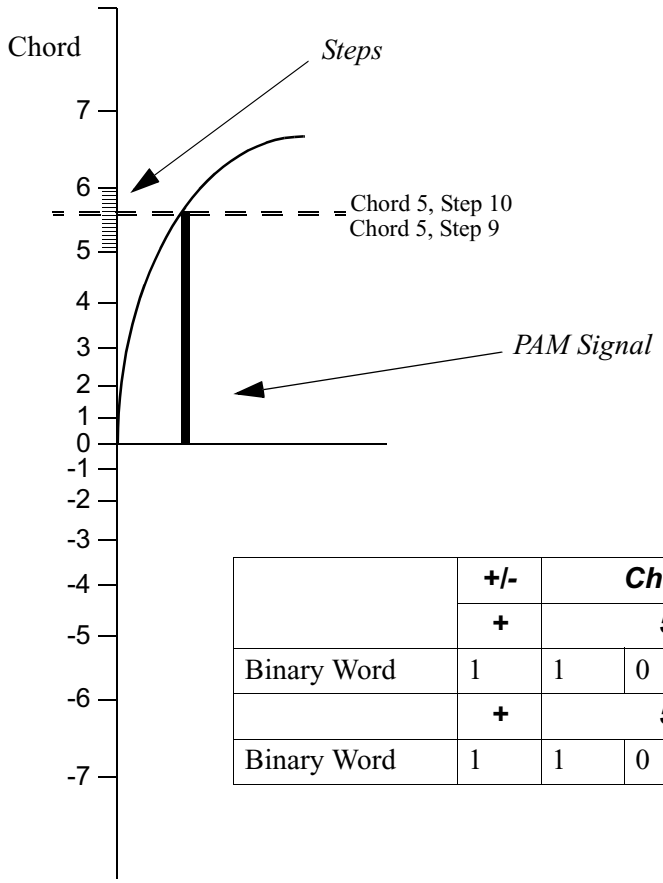

	+/-	Chord			Step			
	+	5			10			
Binary Word	1	1	0	1	1	0	1	**0**
	+	5			9			
Binary Word	1	1	0	1	1	0	0	**1**

Figure 2-15. CAS Distortions Shown in a PCM Scale

TI CAS

How T1 CAS Works

With T1 CAS, the least significant bit of *each* timeslot of *every 6th frame* is robbed and used to carry signaling information instead of voice traffic.

CAS and T1 Superframes

Figure 2-16 illustrates CAS used on a T1 superframe. In the T1 superframe, the least significant bit of each timeslot within Frame 6 is called the A Bit. The least significant bit of each timeslot within Frame 12 is called the B Bit.

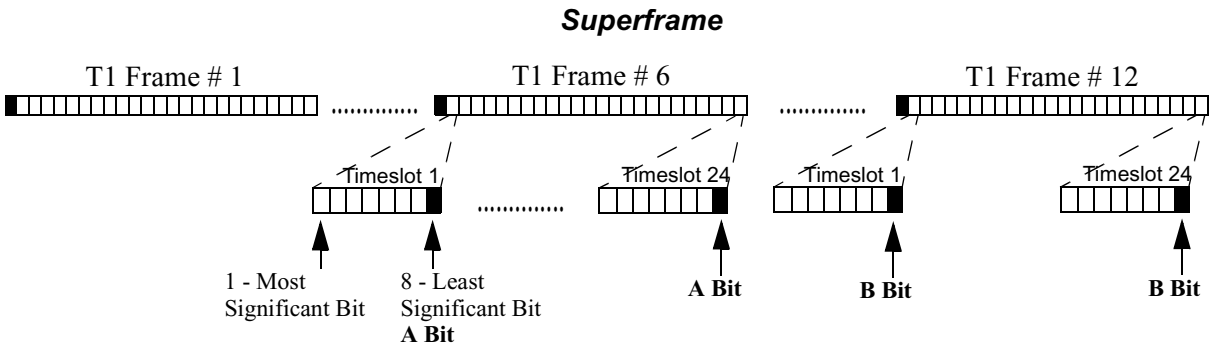

Figure 2-16. T1 Superframe - Channel Associated Signaling

CAS and T1 Extended Superframes

CAS applies to the 6th, 12th, 18th and 24th frame of the T1 Extended Superframe. In the extended superframe, the least significant bits of each timeslot of every 6th frame are named as shown:

Signaling Bit Name	*Least Significant Bit of Every Timeslot of*
A	Frame 6
B	Frame 12
C	Frame 18
D	Frame 24

At the remote end, the receiving multiplexer extracts the signaling information from the last bit in each DS0 of every 6th and 12th frame. This digital signaling information is translated into busy/idle conditions.

E1 CAS

How E1 CAS Works

When E1 CAS is used, timeslot 16 of each frame (except frame 0) within each E1 multiframe is used to carry signaling information for two timeslots as shown in the figure and table below.

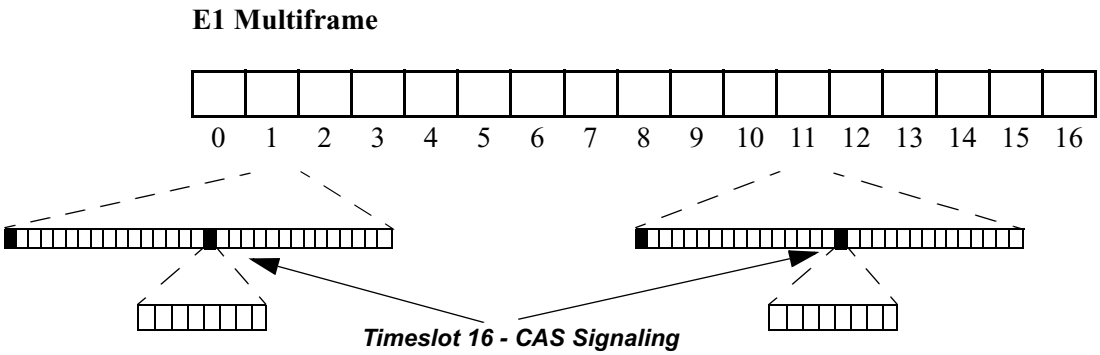

Figure 2-17. CAS Signaling on an E1 Multiframe

Frame	Timeslot 16
Frame 0	0000 1011 - multiframe alignment 0000 1111 - loss of multiframe alignment
Frame 1	4 bits used for signaling for timeslot 1 4 bits used for signaling for timeslot 17
Frame 2	4 bits used for signaling for timeslot 2 4 bits used for signaling for timeslot 18
: :	: :
Frame 14	4 bits used for signaling for timeslot 14 4 bits used for signaling for timeslot 29
Frame 15	4 bits used for signaling for timeslot 15 4 bits used for signaling for timeslot 31

Multiframe Alignment - Timeslot 16 in Frame 0

Timeslot 16 of frame 0 provides multiframe alignment signaling (MFAS). If the E1 multiframe is aligned correctly, timeslot 16 has the following bit pattern: 0000 1011. If the multiframe is not aligned correctly, timeslot 16 has the following bit pattern 0000 1111.

Since 0000 is the alignment signal, a signaling pattern of all zeros is illegal in Timeslot 16 for any other frame.

Common Channel Signaling (CCS)

What is Common Channel Signaling (CCS)?

Common Channel Signaling (CCS) is a message based signaling protocol exchanged between:

- digital PBX and PBX
- PBX and public networks
- Public networks and public networks.

CCS is carried over a single, dedicated signaling channel (D-channel) and is separate from traffic or bearer, B-channels.

D and B Channel Terminology

The terms D and B channel are most often associated with the ISDN digital interface. However, D-channel generally refers to the channel that carries signaling and B-channel refers to the channel that carries voice traffic. Therefore if CCS signaling is used on a T1 interface, the T1 frame is said to have 23B+D channels, where there are 23 channels or timeslots that carry voice and 1 timeslot that carries signaling. Similarly, the E1 frame has 30B+D channels.

Some of the common D-channels are shown in Figure 2-18:

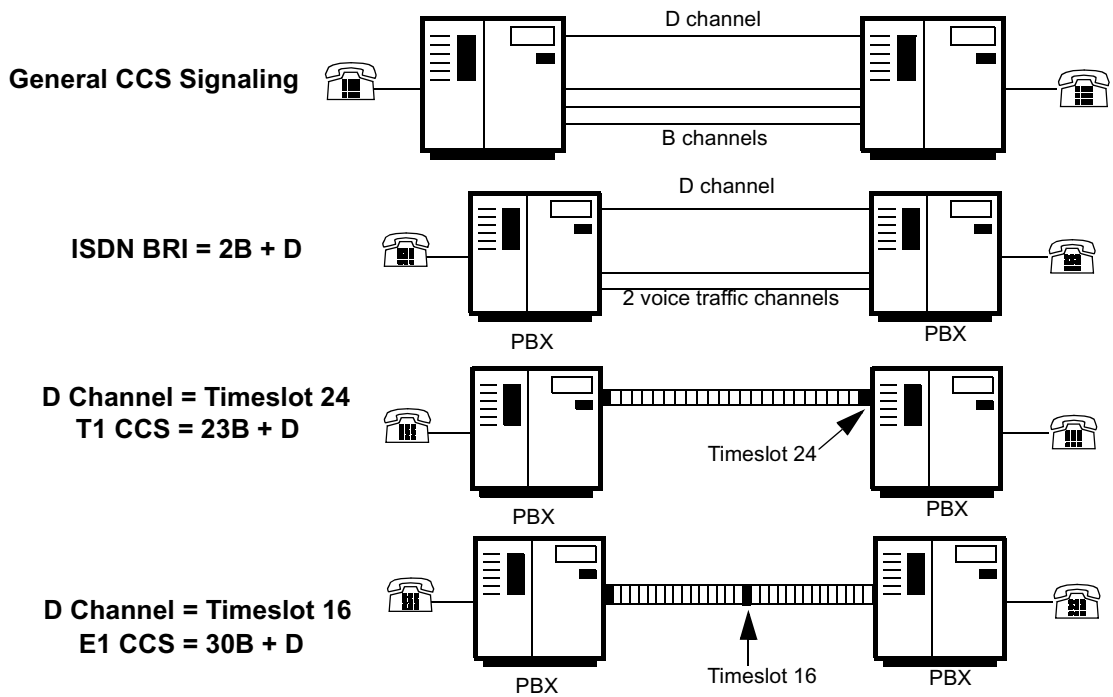

Figure 2-18. D-channels for CCS Signaling

HDLC Frame Format

To ensure that messages are transported reliably over the D channel, all messages are in HDLC frame format. The receiving PBX checks the Frame Check Sequence (FCS) of each HDLC frame. If the receiving PBX detects an error, it signals the other PBX to re-transmit the HDLC frame.

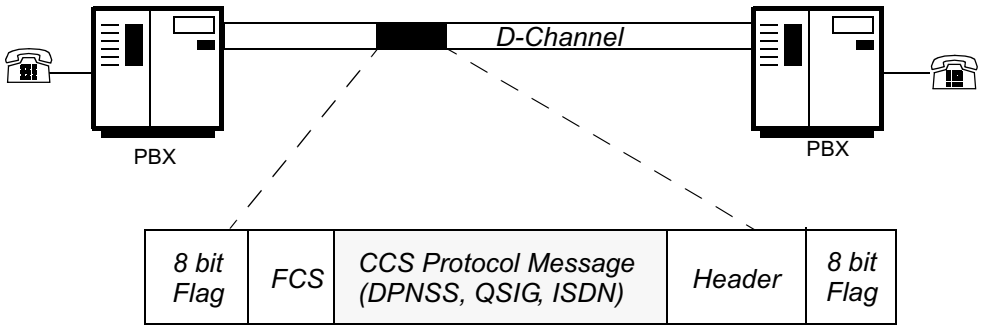

Figure 2-19. HDLC Frame Format

CCS Signaling on T1 and E1 Channels

Introduction

CCS signaling is carried over Timeslot 24 of each T1 frame or timeslot 16 of each E1 frame. All voice channels or timeslots signaling information is carried on one, common timeslot, hence the name common channel signaling.

HDLC Frames in T1 or E1 Timeslots

As mentioned before, messages are sent in HDLC frame format. T1 timeslot 24 and E1 timeslot, however, only consist of 8 bits and therefore, HDLC frame can only be transmitted 8 bits at a time. This means more than one T1 or E1 frame may be needed to carry the entire HDLC message frame. For example, one frame carries the Flag code, another frame carries the FCS, another frame carries the message and so on.

If the PBX has no messages to send, it repeatedly sends the Flag code in the signaling channel. The receiving PBX knows that there is no message being sent if it receives two or more Flag codes. Once the receiving PBX receives a Flag code followed by a non-Flag code, it knows that an HDLC message is being sent. The receiving PBX saves all bits in buffer memory until it receives the end Flag. The receiving PBX now has the entire HDLC frame and checks the FCS for any errors.

If there are no errors, the receiving PBX extracts the CCS message from the HDLC frame and process it. In addition, the receiving PBX must send an acknowledgment message within a defined duration of time. If the original transmitting PBX does not receive the acknowledgment message it interprets that an error has occurred and retransmit the original message.

Types of CCS Standards

Overview

There are numerous types of CCS messages and specifications that can be carried over the D-channel. Some of the commonly used and internationally accepted CCS standards are listed in the table below. There are also many proprietary CCS signaling types that may vary from vendor to vendor and may not be interoperable.

End Points	Types of CCS	Description
PBX to PBX 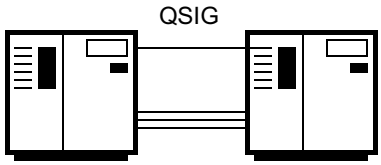	DPNSS	Digital Private Network Signaling System (DPNSS) is a signaling designed for use between two private exchanges. Use primarily in the UK and South Africa.
	QSIG	QSIG is a type of CCS signaling designed for use between two private exchanges. QSIG supports voice and data.
PBX to Public Network 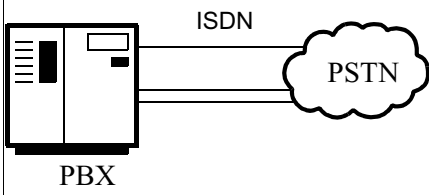	ISDN	ISDN is commonly used CCS signaling type exchanged between PBX to public voice and data networks.
Public Network to Public Network 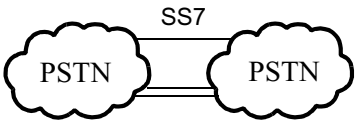	Signaling System 7 (SS7), CCS 7, or CCITT37	Commonly known as SS7, this CCS signaling type is an international architecture or standard used between switches in a PSTN. SS7 provides out-of-band signaling to support call-establishment, billing, routing, and information-exchange functions.

Types of Messages Carried over CCS

Unlike CAS, which only carries supervisory signaling information (onhook or offhook), CCS can carry any type of signaling information including supervisory signaling, PBX status condition, bill record information and much more. Messages exchanged using CCS signaling can include Call Setup, Call Acknowledgment, Setup Acknowledgment, Information, and Disconnect.

ISDN and QSIG CCS Standard

Introduction

ISDN and QSIG CCS operate in similar ways and use the same D-channel messaging format, ITU Q.931 and Q.932. The table below lists some characteristics of ISDN and QSIG CCS signaling standard:

Function	ISDN	QSIG
Uses	ISDN is a commonly used CCS signaling type exchanged between PBX for *public* voice and data networks.	QSIG is a type of CCS signaling designed for use between *private* integrated network exchanges (PINX) or private PBXs.
Traffic Type	Data and Voice	Data and Voice
Symmetry	Asymmetrical - An ISDN connection is always symmetrical, meaning that there is a user side and network side.	Symmetrical (Peers).
D Channel Messages	D channel messages for ISDN and QSIG are defined by ITU Q.931 and Q.932. Q.931 messages include PBX link setup messages, information messages, and problem resolution messages. Each Q.931 message is carried within one HDLC frame.	

ISDN and QSIG Call Setup and Disconnect Process

To seize the digital trunk and establish a call, PBXs supporting ISDN or QSIG CCS exchanges Q.931 call setup messages as shown in Figure 2-20. The figure shows the descriptive names used for each Q.931 message; however, these messages are represented in the HDLC frame as 8 bit words.

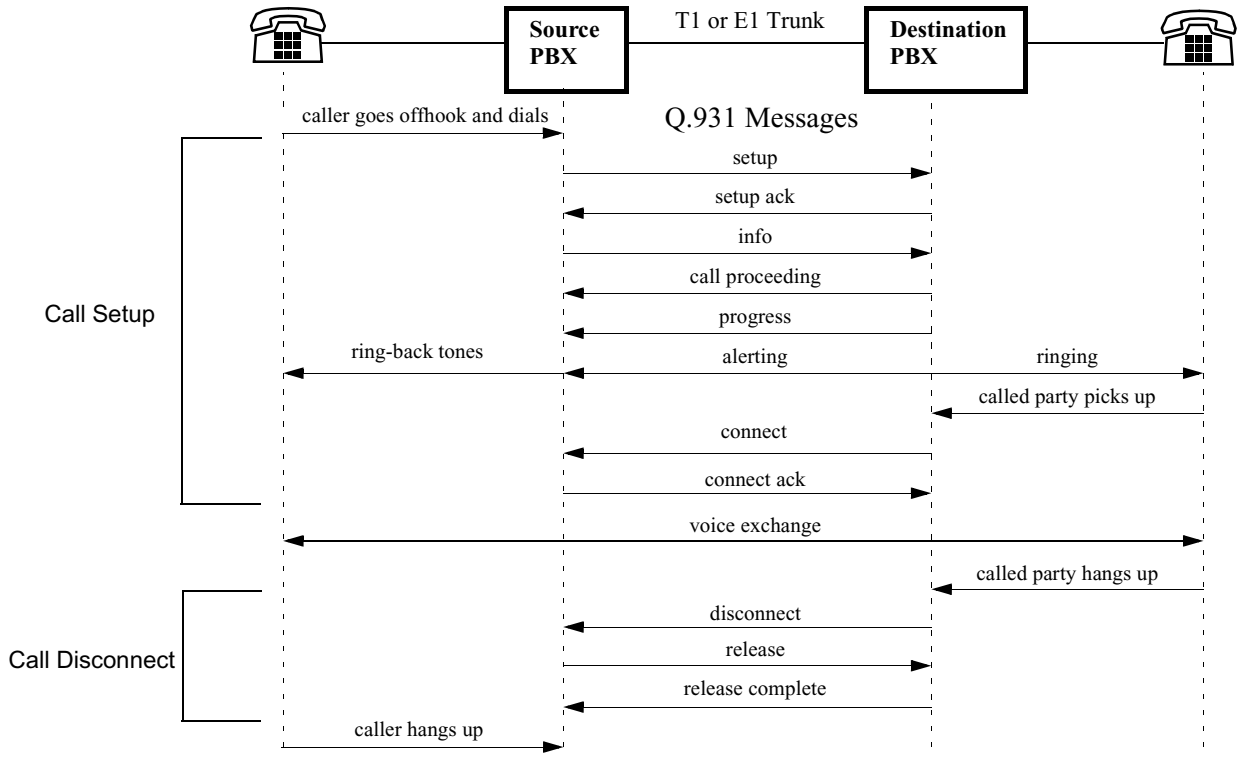

Figure 2-20. Q.931 Call Setup and Call Disconnect Messages

Some of the Q.931 messages exchange during call setup and call disconnection are described in this table:

Q.931 Message	8-bit Word	Description
Setup	00000101	Used to setup the call. Includes all or part of the called number digits and information on the B-channel used to carry the voice traffic. The HDLC frame also contains a unique Call Reference value. All new connections are assigned a unique Call Reference value.
Setup Ack	00001101	Acknowledgment sent by the destination PBX to indicate that Setup message was received correctly and that the destination PBX is awaiting more information to proceed with the call.
Information	01111011	Used to send additional information such as called numbered digits.
Call Proceeding	00000010	Indicates that the destination PBX has all information required to process the call setup information.
Progress	00000011	Indicate the progress of the call setup.
Alerting	00000001	Informs the source PBX that the destination telephone is ringing.
Connect	00000111	Called or destination telephone has been answered.
Connect ACK	00001111	Acknowledgment sent by the source PBX to indicate completion of call setup procedure.
Voice Exchange		Indicates exchange of voice traffic over the B-channel(s).
Disconnect	01000101	Message sent to source PBX to indicate that called party has hung up the telephone and request a disconnect. The Disconnect message contains the Call Reference value that indicates which connection should be disconnected.
Release	01001101	Indicates that the source PBX has disconnected call from the digital trunk. The source PBX also releases the Call Reference value so that it may be used for another call connection.
Release Complete	01011010	Indicates that the destination PBX has fully reset the connection.

Call Setup - Dialed Digits Transmission

The dialed digits of a telephone number can be sent to the destination PBX by two methods: enbloc sending and overlap sending.

Enbloc Sending

All dialed digits and a “Sending Complete” information element are sent within the SETUP message. The “Sending Complete” information elements indicates that all call setup information has been sent. The destination PBX starts to process the call immediately after receiving the Setup message and response with a CALL PROCEEDING message.

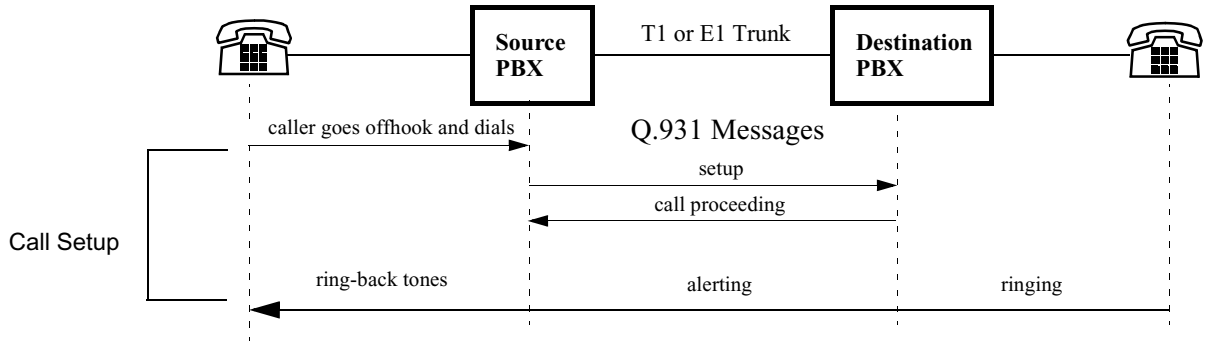

Figure 2-21. Enbloc Sending for Call Setup

Overlap Sending

The source PBX sends part of the dialed number. No "Sending Complete" information element is included. The destination PBX responds with a SETUP ACK to indicate that it has receive the SETUP message but requires more information before it can process the call. The remaining digits of the dialed number are sent by the source PBX in a INFORMATION message. The destination PBX responds with a CALL PROCEEDING message once it has received all call setup information.

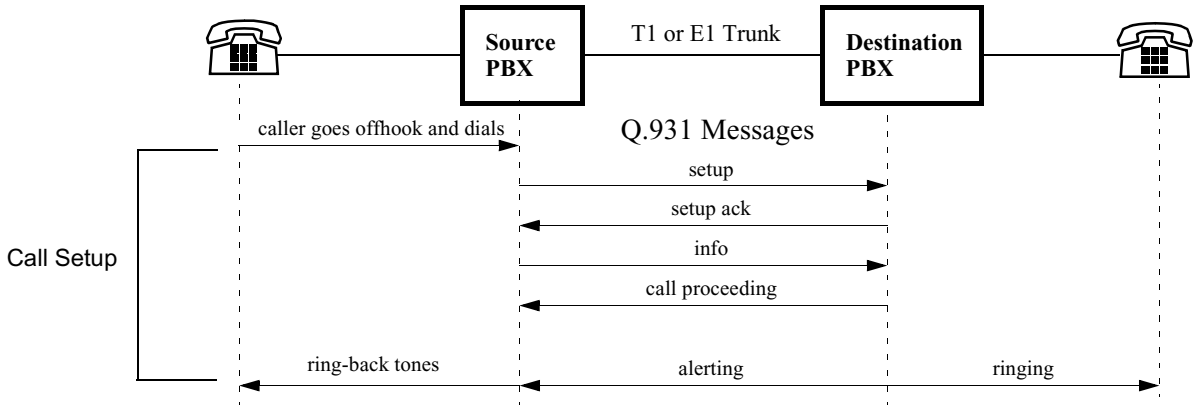

Figure 2-22. Overlap Sending for Call Setup

Q.931 HDLC Frame Format

Q.931 messages are carried in an extended HDLC frame format.

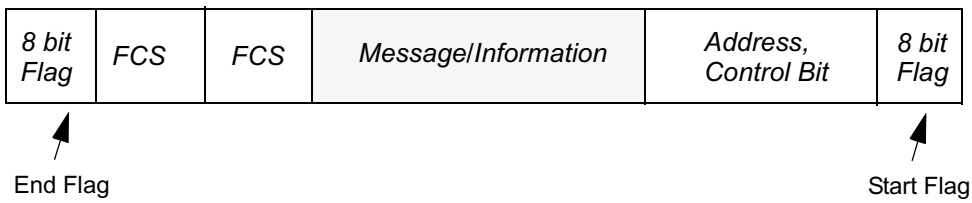

Figure 2-23. Extended HDLC Frame Format for Q.931 Messages

Frame Field		Description
Start Flag	Flag	An 8-bit flag to indicate the start of the HDLC Frame.
Address Field	Service Access Point Indication (SAPI)	The Service Access Point Indication (SAPI) field identifies the internal software module that each device should use to handle information in the HDLC frame. The SAPI field can have the following value: • 0, Normal, ITU call control procedure • 1, Q.931 packet mode transfer • 16, X.25 Level 3 packet mode transfer • 63, Layer 2 (HDLC) link management procedure
	Terminal Endpoint Identifier (TEI)	The Terminal Endpoint Identifier (TEI) is the address of each terminal endpoint. Typically, each device in a contiguous network such as a public ISDN network is assigned a unique TEI. The TEI field can have the following values: • 0 to 63, User-configured TEI • 64 to 126, Network selected TEI • 127, indicates that the HDLC frame should be forwarded to the software handler indicated by SAPI field.

Frame Field		Description
Message/Information Field	Protocol Discriminator	Identifies layer 3 protocol message type.
	Call Reference	Each new connection is assigned a Call Reference number for the duration of the call. All messages send between PBX uses this Call Reference number. When the call is finished and the connection is cleared, the Call Reference number can be assigned to another connection.
	Message	Each HDLC frame can carry one Q.931 message.
	Information Element	Information Elements (IE) provide supplemental information to the message. An HDLC frame can carry more than one IE.
FCS		Frame Check Sequence
End Flag	Flag	An 8-bit flag to indicate the end of the HDLC Frame.

Chapter 3
Voice over Frame Relay and Voice Over IP

Overview

A Review

In Chapter 1, we focused on the simple telephone call and looked into how telephone and PBXs communicated by signaling. In Chapter 2, we shifted to digital voice and also learned about digital signaling. Regardless of whether we had analog voice or digital voice, it was carried over the voice network by a variety of devices.

What is in this Chapter?

The demand for lower cost data and voice solutions for corporate enterprise networks and the rapid growth of the Internet have propelled the emergence of packetized voice solutions, Voice over Frame Relay and Voice over IP. These solution, integrates voice and data networks into a single network, resulting in significant cost savings.

The chapter covers the basic technologies, the advantages and disadvantages, and challenges of implementing packetized voice. This chapter will also describe the H.323 standard Voice over IP implementation.

Voice and Data Convergence

Introduction - A Historical Overview

Up until the 1960s voice communication networks were primarily analog based. Then voice communication networks shifted to digital format with digital PBXs, switches, multiplexers, and channel banks. For most corporate enterprise networks, voice and data have been separate, with voice traffic carried over private leased lines or the PSTN. This means a separate cost for each voice and data path.

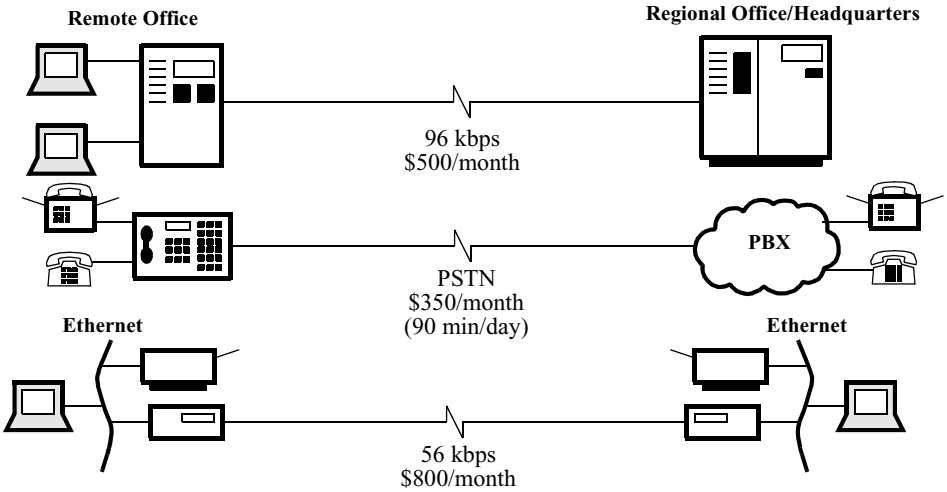

Figure 3-1. Network Without Data and Voice Integration

In recent years, there has been increasing need to converge data and voice networks to provide lower cost telephony and business solutions for both corporate enterprise networks and small office home office (SOHO) users. Data networks typically are lower cost and have enough bandwidth to carry voice traffic. Integrating voice and data networks, while utilizing existing data network infrastructures, provides long term cost benefits.

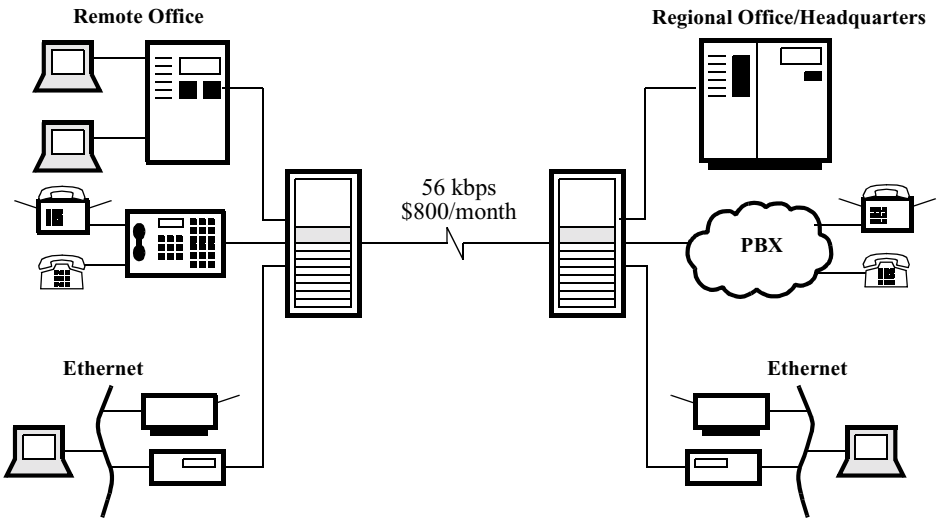

Figure 3-2. Integration of Voice and Data Network

Challenges of Integrating Voice and Data Networks

There are challenges of integrating data and voice network. These challenges include the need for:

- high toll quality voice.
- reliable and predictable delivery of voice traffic.
- low delay for voice traffic.
- low cost, toll bypass for long distance voice traffic.
- high utilization, small delay, low bandwidth and low error for data traffic.

Not all existing data network technologies can address the low delay and high efficiency requirements of voice traffic. Packet based technologies such a Frame Relay, ATM, and TCP/IP, however, are suitable for voice traffic. These technologies take data and package it into packets; these packets are only sent when there is data or voice to be transported. Silence, noise, and flag filled data is suppressed to minimize bandwidth use. Frame Relay access devices (FRADs), ATM switches or IP routers must convert the voice traffic (either analog or digital voice) into packets for transport over the packet network.

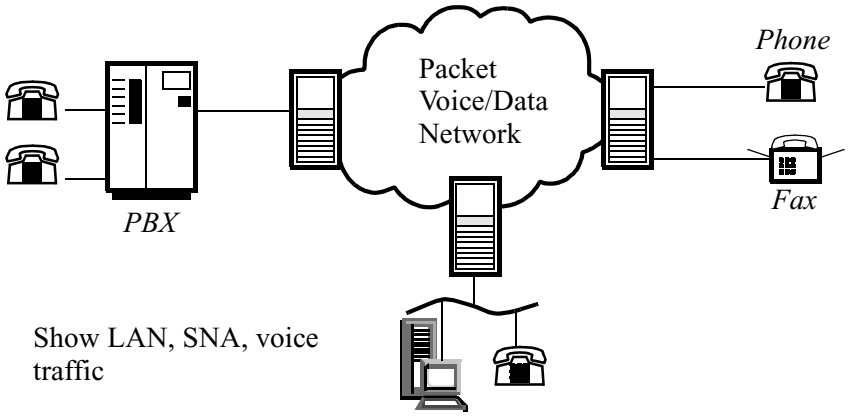

Figure 3-3. Example of Packet Voice/Data Network

In subsequent section, we will examine some of the advantages, solutions and challenges of carrying voice over Frame Relay and voice over IP. How each packet technology combats low voice quality, delay, and jitter will also be examined.

Voice over Frame Relay

What is Voice over Frame Relay?

Voice over Frame Relay is simply voice traffic that is encapsulated in a frame for transport over the Frame Relay network. If you are not familiar with Frame Relay, we will review what it is and how it works.

What is Frame Relay?

Frame Relay is a connection-oriented fast-packet service supporting bursty traffic at medium speeds of 19.2 kbps up to T1 speeds of 1.544 Mbps or E1 speeds of 2.048 Mbps. Frame Relay can be used to interconnect LANs over wide areas and provides capability for connection establishment and data transfer. Bursty traffic refers to unpredictable and sudden transfer of data between end points. The amount of data traffic can vary. Frame Relay supports variable frame size and adds little overhead to data traffic. Frame Relay does not provide error correction or recovery and results in less overall delay across the network. Error correction is provided by the end devices.

A simplified view of Multiprotocol Encapsulation

Frame Relay supports data from various sources and sends this data over one physical connection as shown in Figure 3-4. This is called multiprotocol encapsulation. Frame Relay takes the data and encapsulates it into a frame for transport over the Frame Relay network. We can think of encapsulation as putting the data into an envelope, sealing the envelope, addressing the envelope, and sending it. The data within the envelope, the encapsulated data, is not visible and cannot be altered in any way as it is carried within the Frame Relay network. Intermediate devices that handle the envelope only know about the destination by the address on the envelope, or the header information of the frame. At the receiving end, the envelope or encapsulation is removed before delivery of the data to the endpoint.

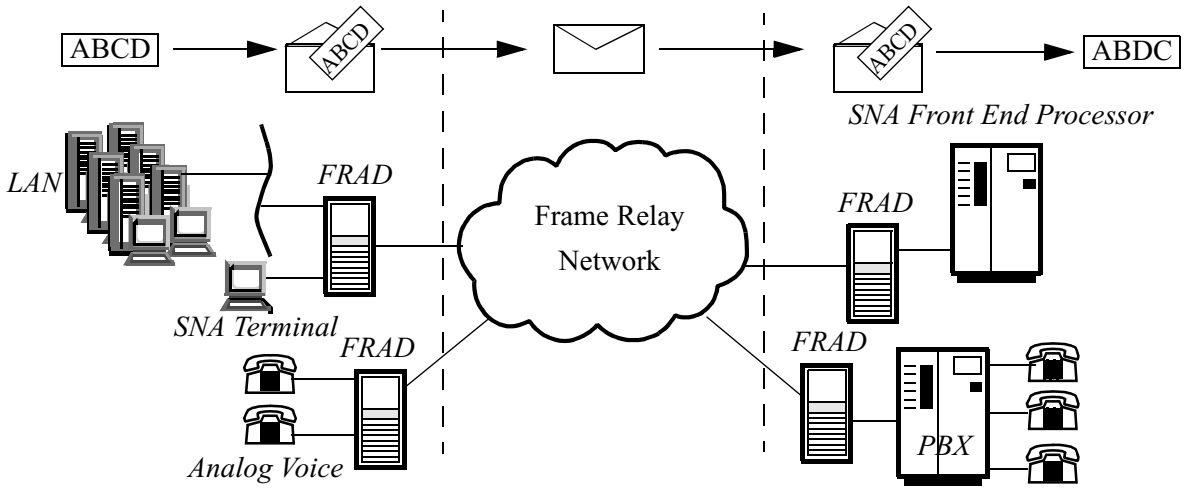

Figure 3-4. Frame Relay and Multiprotocol Encapsulation

Quick Review of Frame Relay

In order to understand how frame relay can carry voice traffic, we will review the some of the terminology of frame relay.

Frame Format

Before data is sent over a Frame Relay network, it is encapsulated into a frame. The data is preceded by a 2-byte header that contains addressing, connection identification, and congestion information.

Flag	*FCS*	*Data/Information Field*	*Address*	*Flag*

Figure 3-5. Frame Format

Virtual Circuits

Frames are transferred over Virtual Circuits. A virtual circuit defines a logical path between two endpoints. There are two types of virtual circuits:

- Permanent Virtual Circuits (PVC) provide the equivalent of dedicated private line service over frame relay between two end points. No call establishment is required.
- Switched Virtual Circuits (SVC) provide a path between two endpoints that is only available for the duration of the call. SVCs require a mechanism for call setup prior to data transfer and call termination after session is complete.

DLCI

Data Link Connection ID (DLCI) is a logical identifier used to identify virtual circuits. Multiple virtual circuits can be carried over one physical connection or link.

Logical and Physical

A key to understanding Frame Relay is to distinguish between the logical and physical. Virtual circuits, PVC, SVCs, and DLCIs are all logical terms; they do not exist physically and only define the end-to-end path between two endpoints. The physical connection between two FRADs in a Frame Relay network can be a physical wire or cable. This physical connection can be shared between more than one logical connection, meaning that more than one virtual circuit can exist on a physical connection.

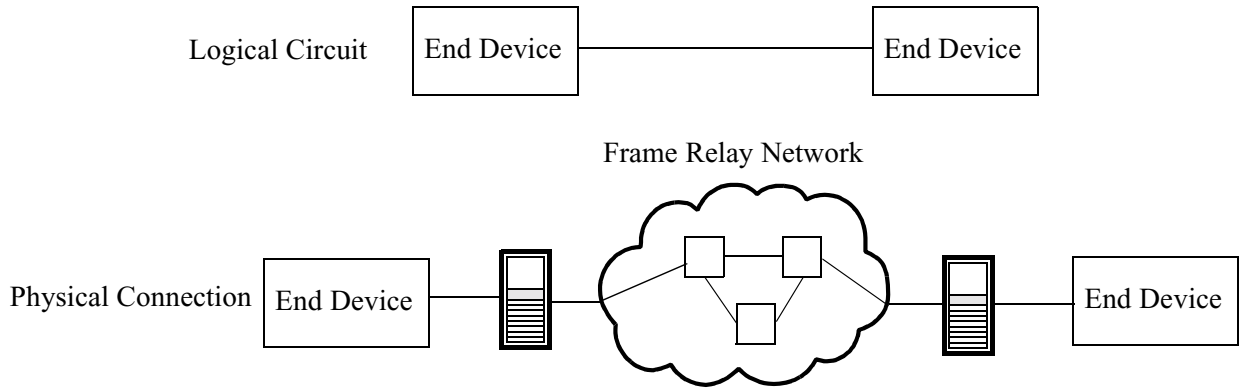

Figure 3-6. Logical Circuit and Physical Connection

How is Voice Traffic Transported over Frame Relay?

Frame Relay Access Device - FRAD

Voice traffic carried over frame relay requires a Voice Frame Relay Access Device (VFRAD) to interface with the telephone system components and to provide access to the Frame Relay network. The VFRADs usually have a voice interface card to which you connect the PBX or phone. The VFRAD will encapsulate and multiplex voice traffic and data traffic into frames for transport over the Frame Relay network. Currently, most VFRAD are still proprietary and functionality will vary from vendor to vendor.

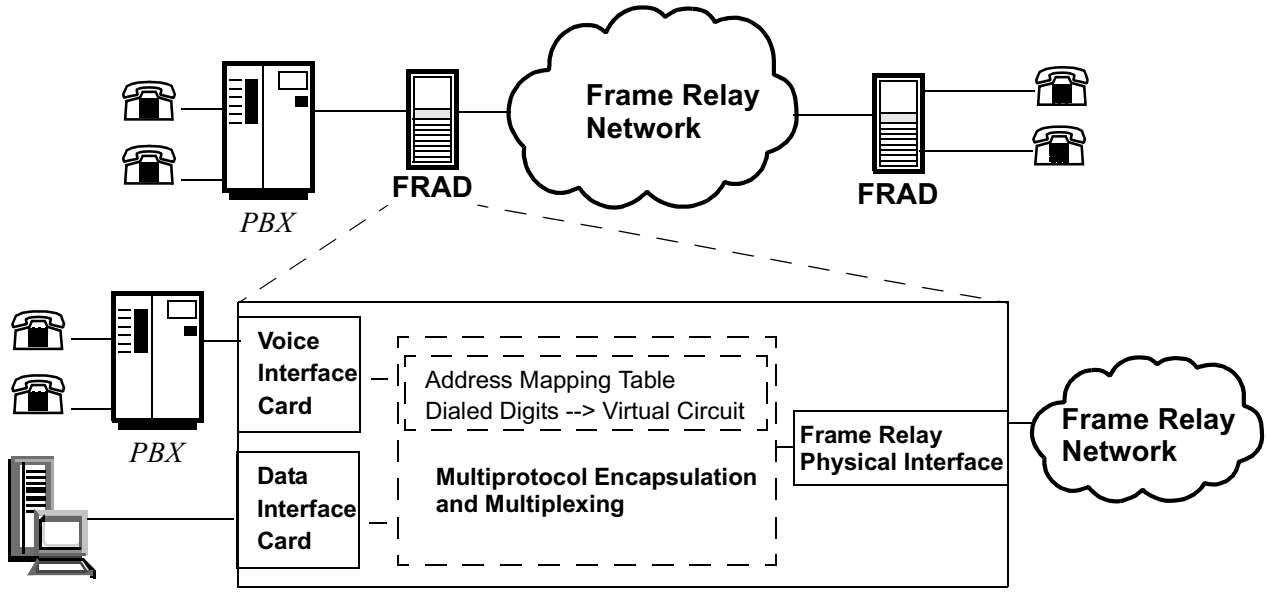

Figure 3-7. Components of a FRAD Required to support Voice over Frame Relay

Some of the common elements and functions of VFRAD are shown in the table below.

Component	*Characteristics and Functions*	*Description*
Voice Interface Card	Analog Interface: E&M Digital Interface: T1 or E1	Most FRADs must be able to interface with existing telephone system components and will support various analog and digital interfaces. If the FRAD connects to a PBX that uses E&M signaling, an E&M interface card is required so that the FRAD can communicate and exchange E&M signaling information with the PBX. From a logical point of view, the PBX regards the VFRAD as another PBX or switch. The frame relay function of the VFRAD is transparent to the PBX. VFRADs can also connect to digital PBX with T1 or E1 interface cards.

Component	Characteristics and Functions	Description (continued)
Voice Interface Card (continued)	Analog to digital voice encoding Analog or digital signaling (E&M, FXS, FXO, T1 or E1)	VFRADs which interface with analog voice components must convert the analog voice to digital voice using coders. VFRAD may support the standard waveform, PCM coder and in addition, the VFRAD may also compress the voice using vocoders to achieve lower bit rates.
	Address Mapping Table	An Address Mapping table is required to identify how a voice call is routed over the Frame Relay network. Typically, you must define how dialled digits are mapped to a particular virtual circuit or DLCI.
Data Interface Card	Support for various data traffic types	In addition to supporting voice, VFRAD can transport a variety of protocol and traffic types. VFRAD will interface with this traffic via a data interface card.
Multiprotocol Encapsulation and Multiplexing over Frame Relay	Virtual Circuits (PVC and SVC)	After collecting and processing the data and voice traffic using the components identified above, the VFRAD will encapsulate the traffic into frames. The frames are then multiplexed for transport.
Frame Relay Physical Interface	Provides interface to the Frame Relay network.	The Frame Relay Physical Interface connects the VFRAD to the Frame Relay network.

Suitability of Voice over Frame Relay

Traditionally, Frame Relay was not used to transport voice. This was largely due to problems with frame-to-frame variation, delay, frame loss, jitter, and network congestion. As compared with other types of traffic carried over frame relay, voice cannot tolerate delay or loss of voice quality.

Traffic Type	Bandwidth Requirements	Burstiness of Traffic	Delay Tolerance
SNA or X.25 data	Less than 19.2 kbps	Low	Can tolerate variable delay.
LAN data	Between 64 kbps to 1.544 or 2.048 Mbps	High	Can tolerate variable delay.
Digital Voice	Between 64 kbps to 1.544 or 2.048 Mbps Bandwidth requirements will depend on encoding and compression type used.	High	Can tolerate very little, defined amount of delay.

Frame relay access devices can carry voice over frame relay by supporting a variety of coding and compression techniques. In a later section, we will examine some of the mechanisms that can be used to minimize poor voice quality and voice delay in Frame Relay networks.

Voice over IP

What is Voice over IP?

Voice over IP is the support of voice within IP packets. Voice over IP has received a lot of attention because many corporate networks and the Internet use the TCP/IP protocol for networking. Almost every company has an existing IP data network. By placing voice traffic over the IP backbone or LAN a company can significantly reduce long distance and telecom charges. The possibility of combining voice over existing corporate IP networks (Intranets) provides many advantages, including:

- retaining and using existing data network infrastructure
- reduce long distance toll cost between branch and head offices
- remote local dialing and telecommuting
- PC to PC, PC to phone, and phone to phone calls over an IP LAN
- interactive PC to PC voice call, chat, and whiteboarding

Voice over the Internet is another use of Voice over IP. Voice over the Internet can offer long distance toll bypass, interactive e-commerce, customer support, and much more.

What is IP?

Internet Protocol or IP is a connectionless packet switching protocol that is part of the IP protocol suite. IP is connectionless because data is sent without a direct connection established with the recipient. Data is encapsulated within an IP packet and sent with source and destination address. IP is called a network layer protocol because it provides the network layer addressing information. There is no guarantee that the IP packet will reach the destination. Nor is there guarantee that each successive packet between the same source and destination will follow the same path. For this reason, IP provides only best effort service for packet delivery.

Transport Protocols

You might be asking the question, if IP can provide only best effort service for packet delivery, why would you encapsulate voice in IP packets?

There is another protocol, called Transport Control Protocol (TCP), that implements a reliable transport service on top of the routing delivery service provided by IP. TCP implements sequential packet delivery and error recovery for duplicate or lost packets. So if an IP packet is lost and an error is detected, TCP will send a message to the source device and ask it to re-transmit the packet. In addition, TCP is connection based; it first establishes a connection with the TCP protocol stack on the other side before sending any packets.

Another Transport layer protocol, User Datagram Protocol (UDP), makes a best effort to deliver packets to destinations, and to deliver it fast with minimal overhead and minimal delay. As it is best effort service, UDP does not guarantee reliable delivery. Voice is usually transported via UDP packets.

Real Time Protocol (RTP) resides on top of UDP and provides fast, end-to-end delivery of real time traffic such as interactive voice and video. RTP will timestamp, add sequence numbering, and monitor delivery of the voice packet.

With one or more of these transport protocols providing the delivery mechanism, the IP encapsulated voice packet will have header information added to it, as shown in Figure 3-8:

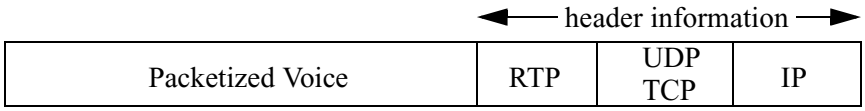

Figure 3-8. IP Encapsulated Voice Packet

How is Voice Traffic Transported Over IP?

IP Router

Voice traffic carried over IP requires a VoIP router that can interface with the telephone system components and connect to an IP network.

■Note

In some examples throughout this chapter, we represent the IP network as a network cloud. The IP network can in fact be a LAN network, LAN networks connected over a WAN network, or an Intranet (private IP network).

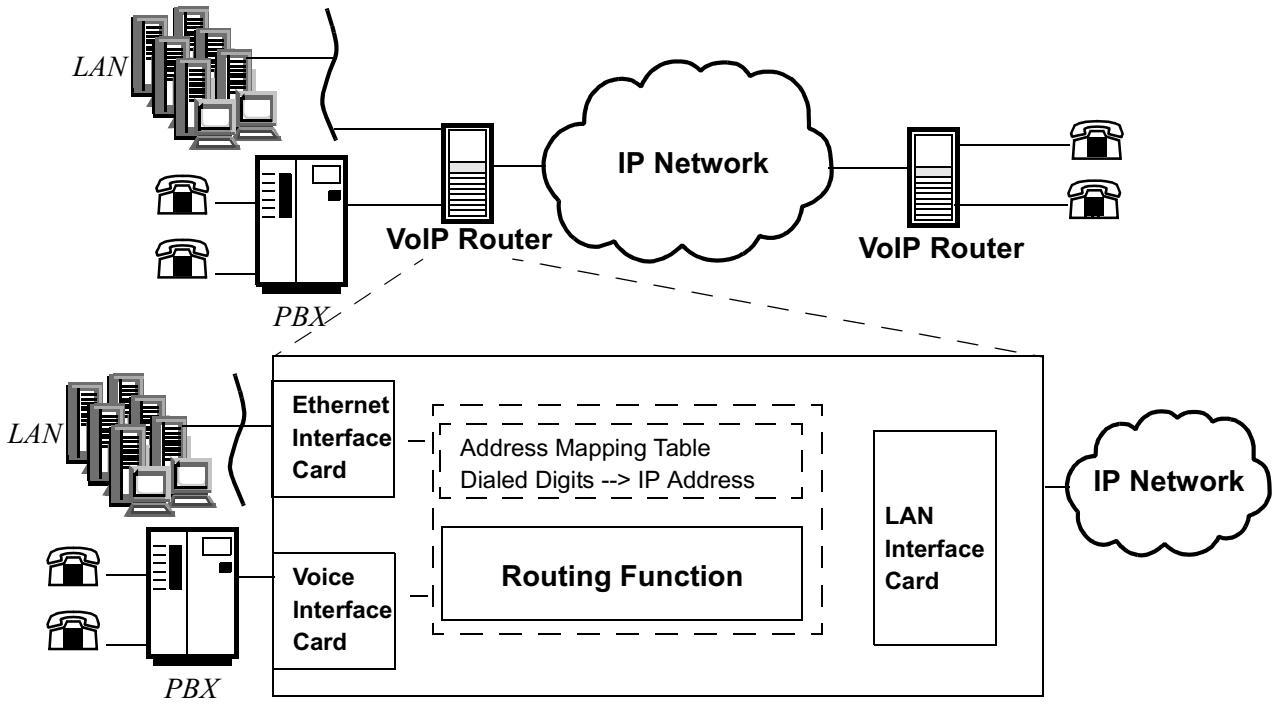

Figure 3-9. Components of a IP Router Gateway

Some of the common elements and functions of VoIP Router are shown in the table below.

Component	Characteristics and Functions	Description
Voice Interface Card	Analog Interface: E&M Digital Interface: T1 or E1	VoIP router must be able to interface with existing telephone system components and will support various analog and digital interfaces. If the VoIP router connects to a PBX that uses E&M signaling, an E&M interface card is required so that the VoIP router can communicate and exchange E&M signaling information with the PBX. From a functional point of view, the PBX regards the VoIP router as another PBX or switch, the IP routing function of the VoIP router is transparent to the PBX. VoIP router can also connect to digital PBX with T1 or E1 interface cards.
Voice Interface Card (continued)	Analog to digital voice encoding	VoIP routers which interface with analog voice components must convert the analog voice to digital voice using coders. VoIP routers may support the standard waveform, PCM coder and in addition, the VoIP routers may also compress the voice using vocoders to achieve lower bit rates.
	Address Mapping Table	An Address Mapping table is required to identify how a voice call is routed over the IP network. Typically, you must define how dialled digits are mapped to an IP address.
Data Interface Card	Support for various data traffic types	In addition to supporting voice, the IP Router can route IP and LAN traffic.

Types of VoIP Routers - Proprietary and H.323

There are two main types of routers that can support voice over IP. There are proprietary routers that support voice over IP and often require that both ends of voice call be processed by the same vendor's proprietary routers. Recently, the ITU H.323 recommendation for packet based multimedia communication systems has emerged as *the* standard for defining voice over IP.

In the next section we will examine the ITU H.323 standard and how it defines voice over IP.

Voice over IP and H.323

What is H.323?

H.323 is an ITU recommendation that defines requirements for voice, video and data communication over IP networks. H.323 does not provide a guaranteed quality of service (QoS). H.323 is a part of ITU's umbrella recommendation, H.32x, which defines multimedia communication over various media.

Standards	Describes Standard for Voice, Video, and Data over...
H.320	ISDN
H.321	ATM
H.323	IP
H.324	POTs (plain old telephone system)

In subsequent sections we will focus on H.323 support for voice only. If you would like more information on the H.323 standard and its support of voice, video, and data we recommend the following references:

- A Primer on the H.323 Series Standard, DataBeam Corporation http:/www.databeam.com
- ITU-T H.323 Version 2, International Telecommunications Union http://www.itu.ch

Why use H.323 for VoIP?

VoIP routers that support H.323 can interoperate with any PC supporting H.323. H.323 is essentially an access protocol. It is to the LAN world what loopstart, ground start or E&M signaling is to the analog world. Typically, an H.323 software runs on a PC to allow the end user to pass voice, and also video and data traffic, over a LAN. In addition, H.323 can run on any common network architecture and is not dependent on hardware or operating system.

H.323 Supplementary Service Support

PBX supplementary service messages and information elements are passed transparently over H.323. (Release 6.1 and greater).

H.323 Operation

H.323 Packet Format

The H.323 protocol terminates voice traffic and prefixes the traffic with an H.323 header. The header is dependent on the version of H.323 protocol. Figure 3-10 illustrates the packet structure.

H.323 Header	Voice Payload

Figure 3-10. H.323 Packet Format

H.323 Headers

The H.323v1 header contains the following header information:

H.323 Header Type	*Size*
IP	20 Header Bytes
UDP	8 Header Bytes
RTP	12 Header Bytes
Total	40 Header Bytes

■Note

For information on Compressed Real-time Transport Protocol (CRTP) headers, refer to the *Vanguard Router Basics Manual* (Part Number T0100-01).

Transport Protocols

To carry voice traffic over IP, H.323 uses two Transport layer protocols, the Transport Control Protocol (TCP) and User Datagram Protocol (UDP). H.323 protocols are carried in TCP and UDP.

Transport Layer Protocol	Traffic Carried	Description
TCP	Voice Signaling Traffic	H.323 uses TCP to carry voice signaling traffic. TCP provides reliable, sequenced packet delivery. Voice signaling traffic encapsulated by H.323 must arrive at the destination node without error and minimum delay. TCP implements error recovery for duplicate or lost packets.
UDP	Audio	H.323 transports audio traffic over UDP session. Unlike TCP, UDP provides fast and simple transaction services with minimal protocol overhead. UDP provides a best-effort, transport mechanism only and does not ensure reliable delivery.

Application Layer Protocols

The H.323 application uses the following protocol structure:

- a TCP session supports H.225 and a separate TCP session supports H.245.
- a UDP session supports RTP and a separate UDP session supports RTCP.
- a UDP session supports RTP and a separate UDP session supports CRTP.

Figure 3-11 displays the Application Layer Protocol relationships.

Application Layer Protocol	Traffic Carried	Description
H.225	Call Signaling, Session Control	Includes call establishment and formatting.
H.245	Call State Status	Includes capability exchange features, logical channel signaling, mode request, delay, unidirectional logical channels.
RTP	Timing, Payload Type	Real Time Protocol (RTP) provides multicast capability.
RTCP	Quality, Session Control Info.	Real Time Control Protocol (RTCP) controls RTP, providing participant tracking, quality notification, packet reception rate and session control information.
CRTP	Compressed RTP	Compressed Real-time Transport Protocol (CRTP) provided RTP/UDP IP header compression for RTP packets to improve utilization of low-speed links.

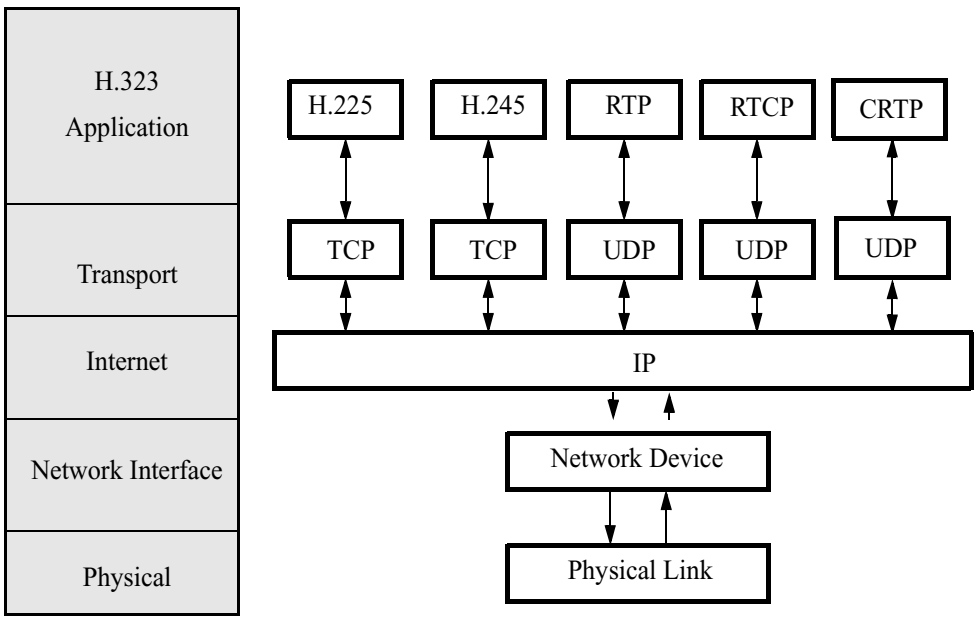

Figure 3-11. Application Layer Protocols

H.323 Environment and Architecture

Introduction

There are four main types of H.323 endpoints shown in Figure 3-12: terminals, gateways, gatekeepers, and multipoint control units (MCU).

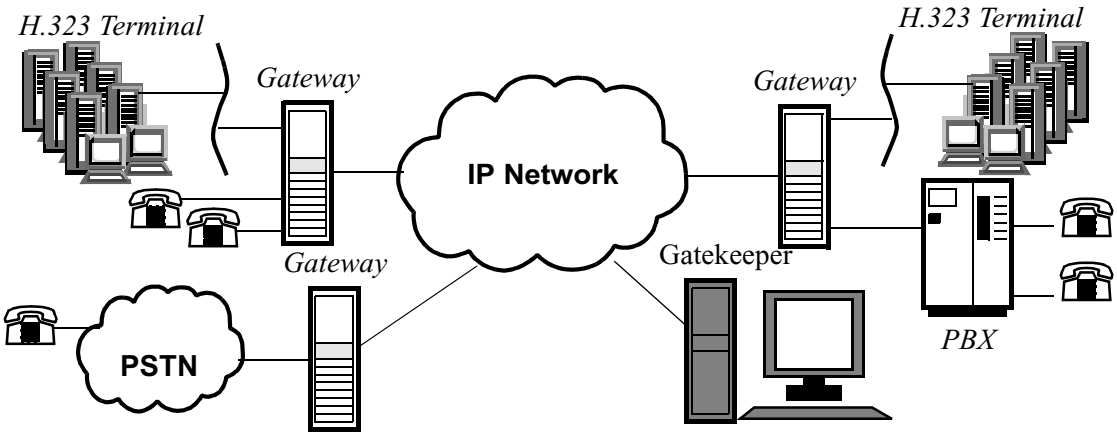

Figure 3-12. H.323 Environment

Terminal

H.323 terminals are the client endpoints on the LAN. H.323 terminals must support voice; video and data are optional. An example of an H.323 terminal, is a PC computer running H.323 compliant software, such as an Internet phone, whiteboarding, or a video conferencing software.

Gateway

The H.323 gateway provides a significant function within a VoIP network. An H.323 gateway provide translation between H.323 endpoints and non-H.323 devices. One example is a PSTN/H.323 gateway; on one side the gateway interfaces with PSTN components (phone, PBXs, switches, or key systems) and on the other side the gateway connects to the IP network. It essentially takes the analog or digital voice and packetizes the voice into IP packets.

■Note

Gateways are optional when connections are LAN to LAN or H.323 to H.323.

The PSTN/H.323 gateway must handle coder functions, call setup, signaling, and routing on both the telephone circuit switching side and the LAN/IP network side. Some of the functions provided by the H.323 gateway are illustrated in Figure 3-13.

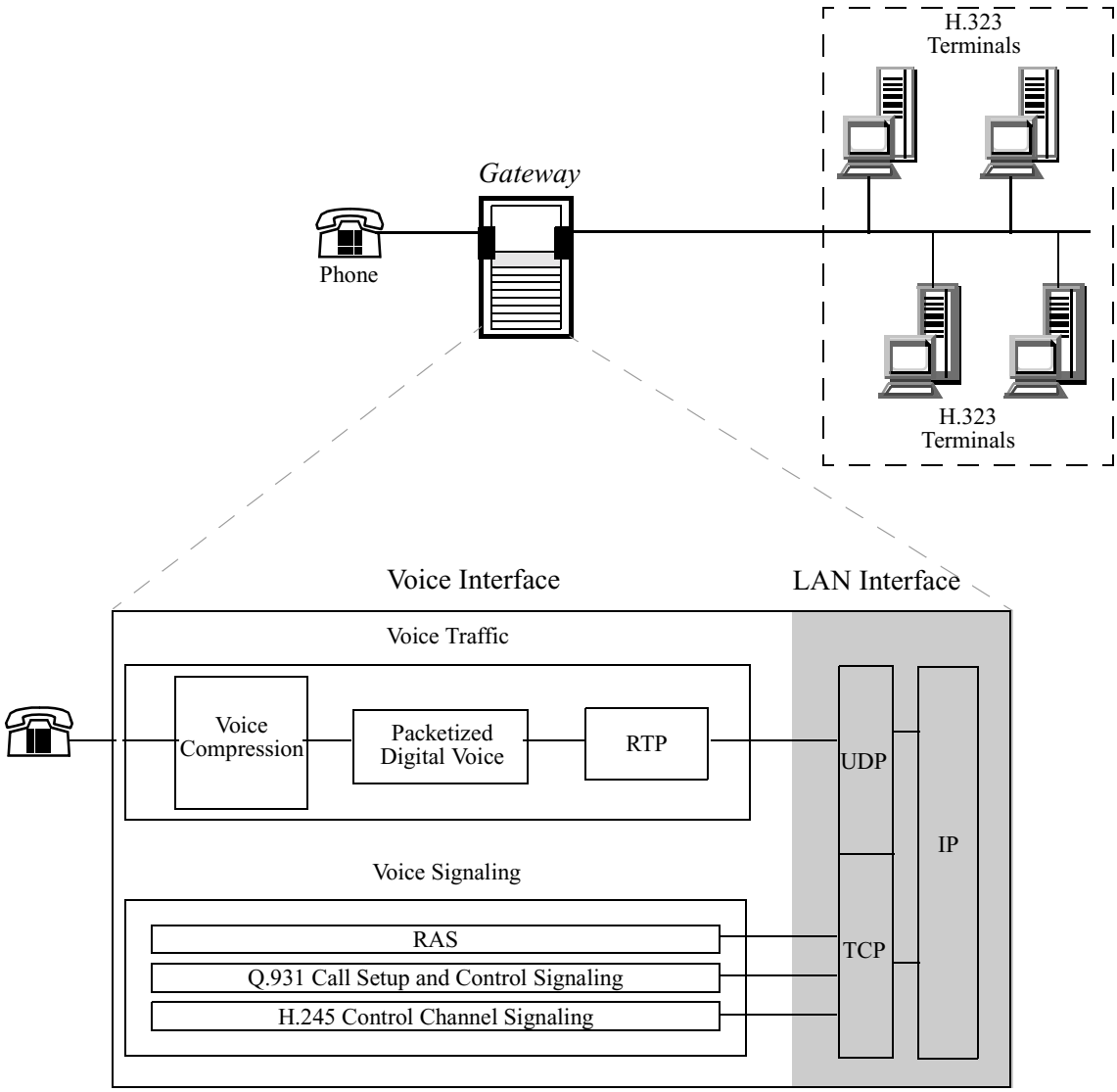

Figure 3-13. H.323 Gateway - Logical Components

Voice Interface Card

The H.323 gateway will have a voice interface card that connects to the phone, PBX, switch or digital trunk. The gateway will typically support analog or digital voice interfaces including: FXS, FXO, E&M, ISDN, T1, or E1 interfaces.

Voice Coding and Compression

Analog voice received on an analog voice interface card will be converted to digital voice and compressed using a voice coder. The H.323 standard supports the following voice coder standards:

- G.711
- G.723
- G.728
- G.729/G.729A
- G.723

IP Router Function

The encoded or digitized voice will then be encapsulated into an IP packet. Encapsulating the voice packets means that RTP/UDP/IP or UDP/IP header information is added so that the voice packets can be sent to the correct destination in the IP network. Voice is transported over UDP because UDP provides fast, best effort delivery.

Gatekeepers

Gatekeepers provide a variety of functions within the H.323 environment including:

Gatekeeper Function	*Description*
Address Translation	Translates telephone numbers into IP addresses and vice versa. This is defined by the Registration, Admission, and Status (RAS) protocol.
Bandwidth Management	Support for requests, confirmation and rejection for additional bandwidth by H.323 endpoints. Defined by RAS protocol.
Access Control Function and Call Authorization	Permits or denies access to certain functions or areas. For example, a gatekeeper can deny access to a certain part of an IP network.
Zone Management	The gatekeeper manages a group or zone of H.323 endpoints (terminals, gateways and MCUs).
Call Routing (Optional)	This optional function allows the gatekeeper to route H.323 calls. For example, a gateway can be configured to route certain calls to the gatekeeper. The gatekeeper will keep track of the call and time of call for billing purposes.
Call Control Signaling	Gatekeepers can support Q.931 call setup and control messages exchanged between digital PBXs or switches.
Call Management	Supports management of all active H.323 calls.

Physically, the gatekeeper is a workstation running software that provides the above functions. A gatekeeper is optional in an H.323 environment. However, if a gatekeeper is present, all H.323 endpoints must use the services and functions offered by the gatekeeper. Registration, Admission, Status (RAS) signaling is for communication between the H.323 endpoints and the gatekeeper.

Multipoint Control Units (MCU)

Multipoint Control Units (MCU) provide support for conferencing between three or more H.323 terminals.

Signaling in H.323 Environment

Overview

As with analog and digital voice calls, signaling is also important for VoIP calls. There is more to signaling in VoIP because the gateway must be able to communicate with the PSTN and the IP network. Three types of signaling can be exchanged in a H.323 environment as shown in Figure 3-14:

1) Registration, Admission, Status (RAS) signaling

2) Q.931 Message signaling

3) H.245 control signaling

■Note

If a gatekeeper is present, the RAS signaling channel is established first, followed by Q.931 signaling and then H.245 control signaling.

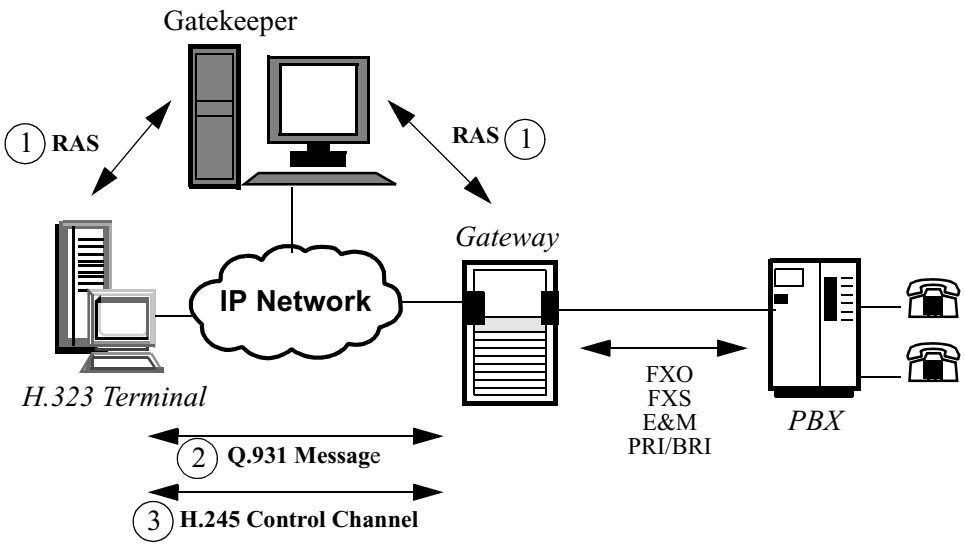

Figure 3-14. Signaling Exchanged in an H.323 Environment

RAS Signaling

When a gatekeeper is present in an H.323 environment, Registration, Admission, Status (RAS) signaling is exchanged between H.323 endpoint and the gatekeeper. When a new H.323 endpoint is installed in a network, it must exchange the following messages with the Gatekeeper:

RAS Signaling Message	Description
Discovery	The endpoint must discover or determine the Gatekeeper it should register with. Discovery can be done manually or automatically. For manual discovery, the H.323 endpoint must know the Gatekeeper's IP address. For automatic discovery, the H.323 endpoint must send an autodiscovery multicast message. The Gatekeeper must respond with its IP address.
Registration	After the H.323 endpoint has discovered the Gatekeeper, it must register with the Gatekeeper. The H.323 endpoint provides information on its IP address.
Admission	After registration, the H.323 endpoint joins the Gatekeeper's zone. The H.323 endpoint must also request a specific amount of bandwidth for a call. At any time, the Gatekeeper can modify the allocated bandwidth.

Once the gateway is a member of the gatekeeper's zone, the gatekeeper will use RAS to exchange address information, call authorization, and provide bandwidth management functions.

Note

If a gatekeeper is not present, RAS signaling will not be used.

Q.931 Call Setup and Control Signaling

In Chapter 2, we learned that Q.931 messages are exchanged between PBXs for call setup. In the H.323 environment Q.931 messages are also used for call setup between H.323 endpoints. Each Q.931 message is carried within one HDLC frame. For VoIP, this HDLC frame is encapsulated into a TCP/IP packet. TCP is used to transport voice signaling because it provides a more reliable delivery mechanism than IP alone or UDP/IP.

H.245 Control Channel Signaling

An H.245 control channel is a logical channel established between two endpoints once a call is setup. The H.245 control channel provides receive and transmit capability exchange messages. For example, H.323 terminals use the H.245 control channel to exchange messages on what compression types or coders are supported at each terminal. This will allow the H.323 terminals to synchronise and use the same compression scheme for compression and decompression at each end.

The H.245 control channel can also be used to carry DTMF tones. This is especially useful for applications such as PC or telephone banking.

H.323 Call Setup

Introduction

H.323 call setup will differ for an H.323 environment with and without the gatekeeper. When a gatekeeper is present, all H.323 endpoints must communicate with the gatekeeper. If a gatekeeper is not present, the H.323 endpoints must know the addresses of each endpoint.

H.323 Call Setup Without Gatekeeper

Example

We will first consider a PC running an H.323 compliant software that would like to make a call to a telephone. How would it be possible for the H.323 terminal (the PC) to call a phone when one device uses IP addresses and the other devices uses phone numbers? This is where the gateway plays an important role. The gateway maintains a list of telephone numbers and IP addresses and provides a translation function.

Suppose a phone user at the H.323 terminal wishes to call extension 5001. The user simply “dials” or enters the number 5001 on the dial keypad provided by the H.323 compliant software. The H.323 complaint software will translate this telephone number into an IP address and send a Q.931 setup message encapsulated within an IP packet to the gateway.

The gateway will lookup its address translation table and determine that 5001 can be accessible via its voice interface card. The gateway and H.323 terminal will exchange H.245 compatibility messages. These compatibility messages allows the gateway and H.323 terminal to ensure that they are using a common coder/decoder for the voice compression function.

The gateway will exchange signaling messages with the PBX to setup the call. Once the call setup procedure is complete, the gateway opens a H.245 audio channel.

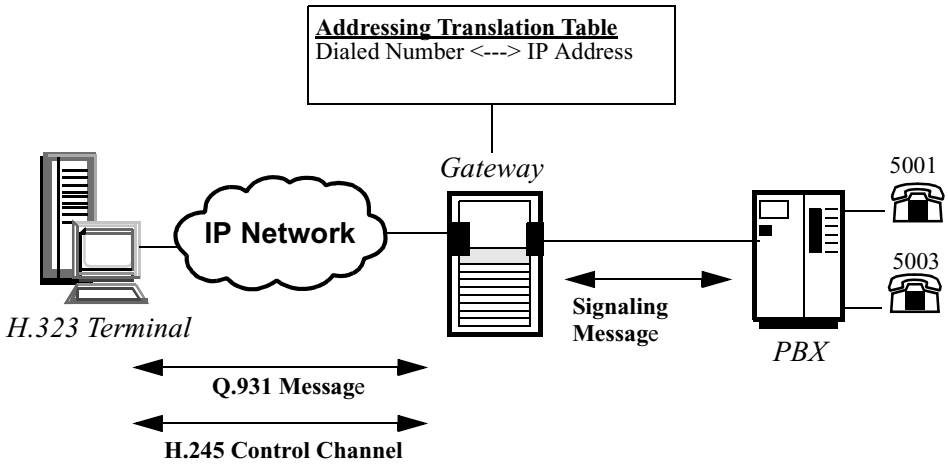

Figure 3-15. Call Setup without Gatekeeper

H.323 Call Setup with Gatekeeper

Example

When a gatekeeper is present in an H.323 environment, all H.323 endpoints must communicate with the gatekeeper. All H.323 endpoints must register and request admission to the gatekeeper's zone. Only after registration and admission can a call be established between two H.323 endpoints.

All call messages are routed through the gatekeeper. For call signaling, however, it is optional whether Q.931 messages signaling message are routed through the gatekeeper or directly between endpoints. Typically, this is a configurable option within the gatekeeper and during initial RAS signaling the gatekeeper will notify the H.323 endpoint whether to send Q.931 messages directly to the endpoint or via the gatekeeper.

If call signaling is routed via the gatekeeper, the gatekeeper can choose to close the signaling channel after the call is setup or leave the signaling channel open for the duration of the call. An open signaling channel provided via the gatekeeper can be used for supplemental services such as call forwarding.

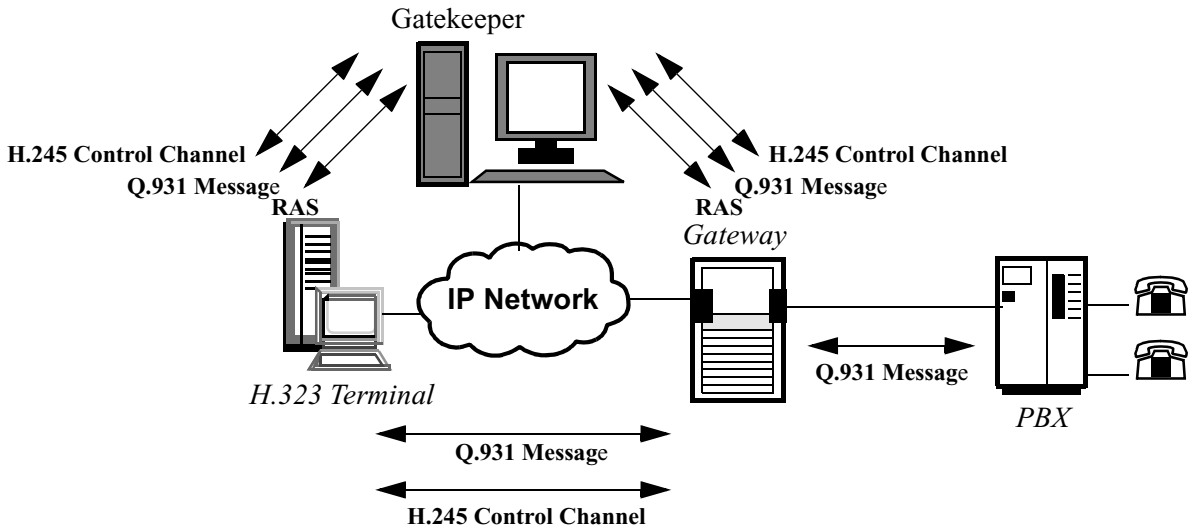

Figure 3-16. H.323 Call Setup with Gatekeeper

Suitability of Voice over Frame Relay and Voice over IP - Maintaining Quality of Service

Overview

Earlier in this chapter, we mentioned that there are inherent challenges of carrying voice over a Frame Relay or IP network. Both types of networks will encounter similar problems that will affect voice quality including delay, echo, loss of voice quality, and packet loss.

Where Can Delay Occur in a Frame Relay or IP Network

In a frame relay or IP network, delay can occur in a number of places as shown in Figure 3-17. If the combination of these delays exceeds 200 milliseconds, voice conversation quality will suffer. A voice call, for example, may lose its full duplex, or two way characteristics, and callers will have to take turns speaking to prevent overlap in each other's speech.

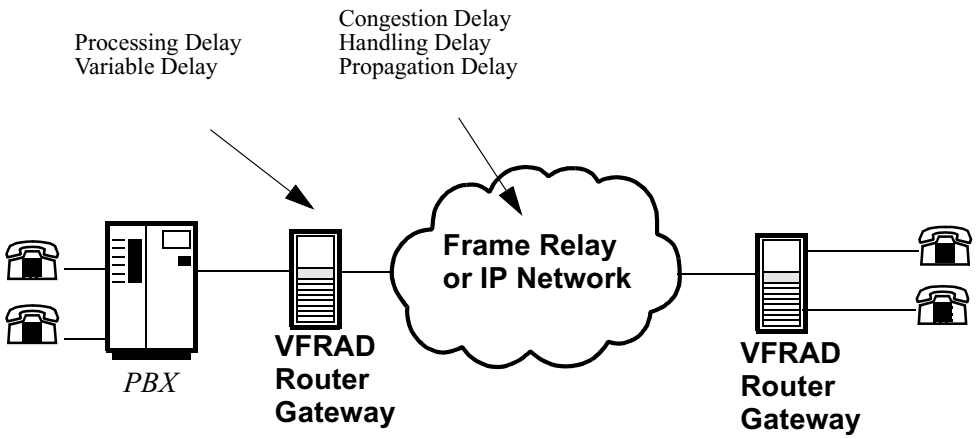

Figure 3-17. Delay in a Frame Relay or IP Network

Propagation Delay

In traditional analog public switched network, delay is caused by distance. The farther the distance, the longer the time it takes for the voice signal to travel over all the intermediate physical devices before reaching the phone at the other end. This type of delay is called *propagation delay* and can also exist in Frame Relay and IP networks.

Handling, Network or Congestion Delay

In addition to propagation delay, there is *handling, network, or congestion delay.* Handling delay refers to the time that it takes for each physical device to handle the voice traffic. Handling delay can exist in voice over Frame Relay or IP networks and cause serious problems affecting voice quality. When Frame Relay or IP networks become congested this will delay transmission of the voice traffic.

Processing Delay

Processing delay can occur at the VFRAD, Router or Gateway. This delay may be caused by the time it takes for voice to be encoded, called coder delay, or the time it takes to packetize the data, called packetization delay. Most VFRADs, Routers or Gateways have mechanisms to keep coder and packetization delay to a minimum and these types of delays will not adversely affect the overall or absolute delay.

Variable Delay

Variable delays can be introduced between the voice packets when data packets and voice packets are multiplexed by the VFRAD, IP Router, or Gateway, as shown in Figure 3-18. While variable frame size is beneficial for effective bandwidth usage, it may cause delay problems for links that carry large data frames in between voice frames.

At the remote end, after the data and voice are de-multiplexed, the voice samples are sent to the remote phones. Due to the introduction of variable delays between voice samples, the voice may sound ch-o-pp-y. This choppiness is also called *jitter*.

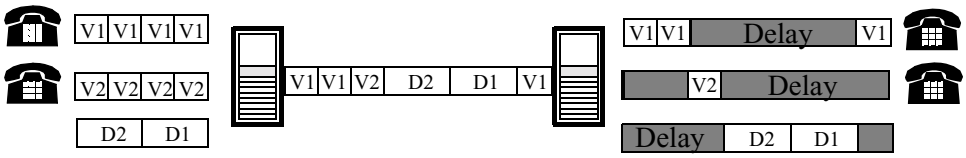

Figure 3-18. Multiplexed Voice and Data

To remove this jitter, VFRADs, IP Routers or Gateways at the transmitting end will typically implement some sort of prioritization so that voice packets take precedence over data packets. Voice packet prioritization is especially useful for lower speed links between 56 to 512 kbps.

Alternatively at the receiving end, buffering can be used. With buffering, voice packets are delayed in a buffer for a pre-defined amount of time. This will allow sequential voice packets to accumulate in the buffer over time. After the pre-defined amount of time, the voice packets are converted to analog voice at a constant rate, resulting in a smooth continuous flow of voice.

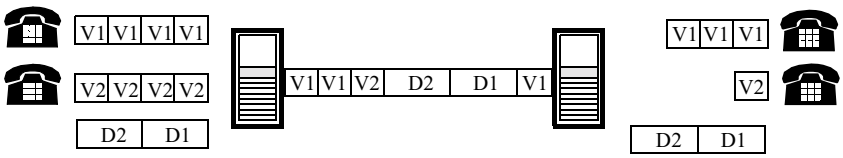

Figure 3-19. Voice Buffering

Jitter Delay

If we use buffering to smooth out our voice and reduce jitters, this means that the device will have to hold onto voice packets for a period of time. The disadvantage of using buffering to remove jitters is that it affects the total end-to-end delay.

Lost Packets Recovery

IP only provides best effort service for packet delivery. Even when voice is carried over UDP/IP or RTP/UDP/IP, packet loss can occur. Network congestion can cause voice packets to be dropped. Unlike data packets, voice packets are time sensitive and lost or dropped voice packets will affect the voice quality and cause voice to sound choppy.

Chapter 4
Vanguard Voice Solution

Introduction

Vanguard products and Vanguard Voice Applications Ware offer versatile packetized voice solution. The Vanguard Voice Applications Ware allows you to efficiently integrate voice, video, fax, and data traffic onto your IP or Frame Relay network. This eliminates the need for costly, redundant wide area network circuits to branch office locations.

Voice Over IP

Vanguard Voice Applications Ware offers Voice over IP solutions by:

- ITU H.323 standards based VoIP.
- Vanguard Managed Solutions proprietary SoTCP/VoIP.

Voice Over Frame Relay

Vanguard Managed Solutions is an industry pioneer in its Voice Relay solution to support voice over Frame Relay.

Features and Benefits

Vanguard's voice solution offers:

- Dynamic voice routing over both IP and Frame Relay.
- ITU H.323 standard compliance for voice over IP.
- Real-time Fax demodulation.
- Integrated Fax and voice of the same port.
- Any to any WAN level call switching.
- G.723.1, G.729.A, and Vanguard Managed Solution's proprietary CVSELP voice compression with built-in echo cancellation.
- Voice Activity Detection or Silence Suppression support.
- Channel Associated and Common Channel Signaling.
- PBX switch functions and hunt group support.
- Support for PLAR and OPX applications.
- Voice call broadcasting support.
- Dynamic Modem support.
- PBX supplementary service messages and information elements are passed transparently over H.323. (Release 6.1 and greater).
- T.38 Fax
- DSP Resource Management

Scalable Hardware

The Vanguard family of products that support voice include:

- Vanguard 305
- Vanguard 320
- Vanguard 34x
- Vanguard 6400 Series
- Vanguard 6560/6520
- Vanguard 7300 Series

These products provide voice interface cards or daughtercards that offer a variety of analog or digital interfaces to support connectivity of phones, PBXs, keysystems, faxes, or digital trunk lines.

Vanguard 7300 Series

Vanguard 7300 Series only supports digital interfaces.

Note

CVSELP voice compression is not supported for the Vanguard 7300 Series.

For More Information

For more information on Vanguard products, visit our website:

http://www.vanguardms.com/support/documentation

Index

Symbols

A

B

C

C (Continued)

D

E

E (Continued)

F

G

H

I

L

M

N

O

P

Q

R

S

T

U

V

W

Z